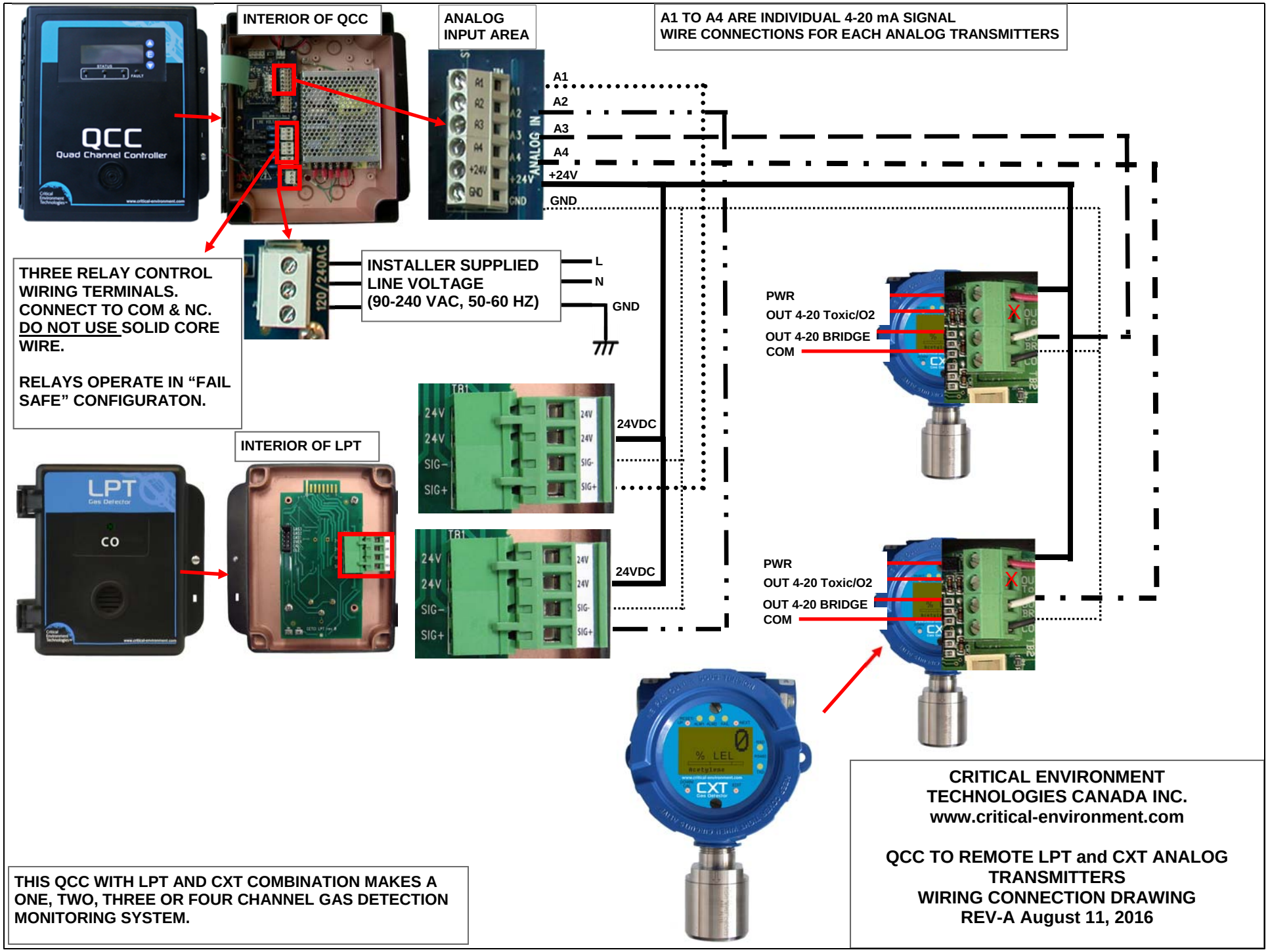
INTERIOR OF QCC
ANALOG INPUT AREA
A1 TO A4 ARE INDIVIDUAL 4-20 mA SIGNAL WIRE CONNECTIONS FOR EACH ANALOG TRANSMITTERS
A1
A2
A3
A4
+24V
GND
THREE RELAY CONTROL WIRING TERMINALS. CONNECT TO COM & NC. DO NOT USE SOLID CORE WIRE.
RELAYS OPERATE IN "FAIL SAFE" CONFIGURATON.
INSTALLER SUPPLIED LINE VOLTAGE (90-240 VAC, 50-60 HZ)
L
N
GND
PWR
OUT 4-20 Toxic/O2
OUT 4-20 BRIDGE
COM
24VDC
INTERIOR OF LPT
PWR
OUT 4-20 Toxic/O2
OUT 4-20 BRIDGE
COM
24VDC
THIS QCC WITH LPT AND CXT COMBINATION MAKES A ONE, TWO, THREE OR FOUR CHANNEL GAS DETECTION MONITORING SYSTEM.
CRITICAL ENVIRONMENT TECHNOLOGIES CANADA INC.
www.critical-environment.com
QCC TO REMOTE LPT and CXT ANALOG TRANSMITTERS
WIRING CONNECTION DRAWING
REV-A August 11, 2016