# E2639
# Refrigerant Detector

Evikon

Sensor Technologies
Measurement & Control Instrumentation

evikon.eu

# Standalone and multifunctional

E2639 is a next-generation product developed to deliver reliable detection of toxic and combustible gases in a wide range of market sectors such as:

- HVAC/R
- Agriculture
- Food and beverage
- Healthcare and laboratories
- Process industries

The detector is based on the unified PluraSens® Platform having RS485 Modbus RTU and 2 × 4-20 mA outputs offering customers different possibilities for communication with controllers and SCADA systems.

E2639 is also equipped with 3 x SPDT relays (2 for alarms, 1 for fault) accompanied with 4 x LEDs and a buzzer for better safety and visual, audible indication.

Most of known sensing technologies are implemented providing a possibility to detect more than 20 different gases and gas groups.

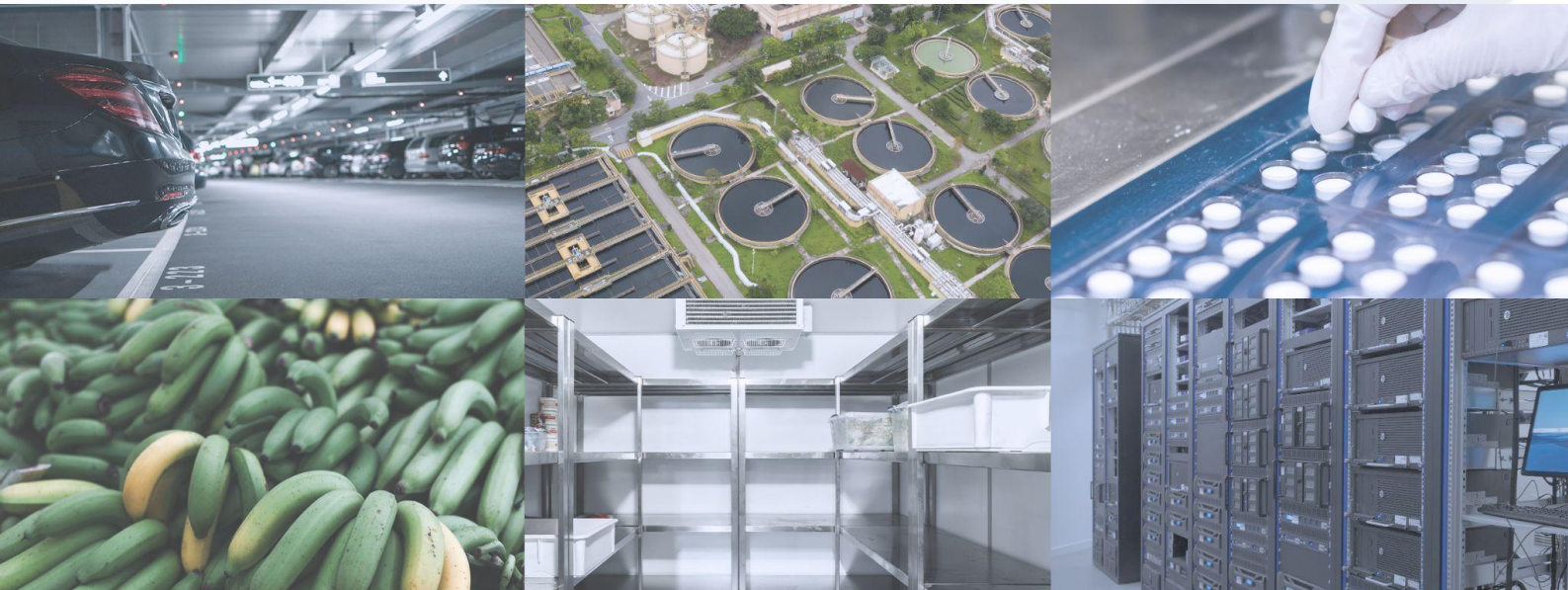

# Convenience of use

### User-oriented installation

E2639 is equipped with **3 x M20 cable glands** and **duplicated terminals** to save time during installation.

Enclosure design features side **mounting brackets** making mounting of the detector easier.

### Multiple calibration possibilities

Optional **WiFi module** gives a possibility of connection to a smartphone or tablet PC for convenient calibration and configuration.

**No additional apps are required**. Access is provided via URL and password protection with multiple levels of access.

GSH Smart Sensors calibration can be done through E2639 or by connecting the GSH module directly to PC using special **configurator (SSI).**

### Pre-calibrated Smart Sensors

GSH Smart Sensors come **already pre-calibrated.**

**M12 connector** enables fast sensor replacement without the need to open the enclosure lid.

Being fully **interchangeable**, any GSH Smart Sensor can be connected to the same E2639 main unit (for example, HFC sensor can be replaced with $CO_2$ or $NH_3$ sensor and so on) and purchased separately.

**Built-in calendar** can notify end customers when calibration is due.

24V OUT | IP65 | 4-20 mA | RS485 Modbus

# Refrigerant Detector
# E2639-HFC

## Features

- 2 x 4-20 mA user configurable analog outputs
- RS485 Modbus RTU digital interface
- 3 x SPDT Relays: 2 for alarms, 1 for fault
- 2 x 24 V outputs for controlling alarm signals*
- Magnetic button for alarm reset & WiFi enable
- WiFi interface option for configuration and calibration

## Specifications

| | |
|---|---|
| Detected gases | R-32, R-134a, R-404A, R-407C, R-410A, R-449A, R-454A, R-454B, R-454C, R-507, R-513A, R-514A, R-1234ze, etc. |
| Sensor type | Metal-oxide semiconductor (MOS), Infrared (NDIR) on request |
| Sampling method | Diffusion |
| Typical detection ranges | 0...1000 ppm<br>0...2500 ppm |
| Resolution / digital unit | 1 ppm |
| Response time T90 | < 120 s |
| Signal update | Every 1 second |
| Sensor lifetime | > 5 years |
| Maintenance interval | 12 months |
| Self-diagnostics | Full functionality check at start-up |
| Warm-up time | ≤ 1 min |
| Power supply | 14...36 VDC (default)<br>24 VAC or 230 VAC as options |
| Power consumption | < 6 VA** |
| Digital interfaces | RS485, Modbus RTU protocol<br>2.4 GHz WiFi (802.11 b/g/n) option |
| Relays | 3 × SPDT relays (2 for alarms, 1 for fault) |
| Outputs | 2 × 4-20 mA analog outputs, user configurable<br>2 x 24 V outputs (for controlling alarm signals) |
| Output scale width | Recommended: 5-100% of the range;<br>> 10 × resolution in any case |
| Enclosure | Grey ABS plastic, wall mount, protection class IP65 |
| Dimensions | H80 × W190 × D55 mm (housing only)<br>H109 with cable glands |
| Operating conditions | -30...+60 °C, < 95 %RH |
| Alarm signalling | |
| Visual | 4 x LEDs (red, green and yellow) |
| Acoustic | Buzzer 85 dB |
| Applicable standards | Directive 2014/30/EU, 2014/35/EU and 2014/53/EU, EN IEC 61010-1:2019, EN IEC 50270:2015, EN IEC 50271, ANSI/ASHRAE 15, EN IEC 60079-29-0:2026, EN IEC 62990-1:2022, EN IEC 378-3:2026, EN IEC 14624:2020, ETSI EN 300 328 V2.2.2 |

## Dimensions

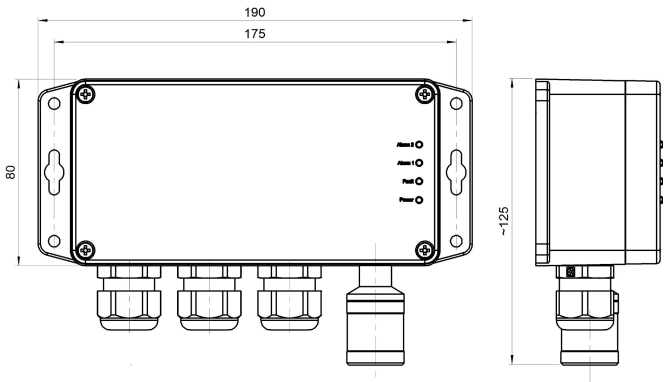


**Version with MOS sensor**

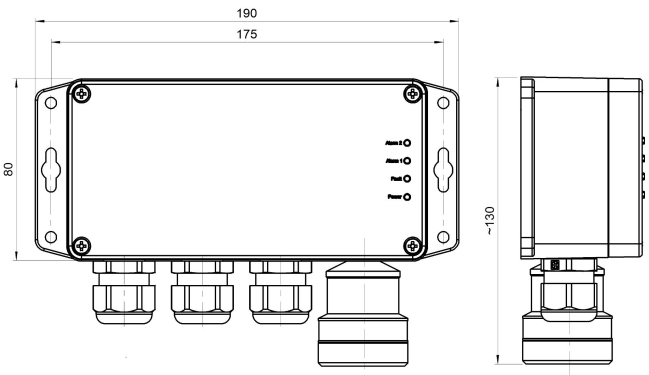


**Version with NDIR sensor**

* 24V outputs are relative to power supply e.g. supplied voltage of device is transferred to output voltage
** Does not consider 24V output connected device consumption

## GSH Smart Sensors Specification

| | |
|---|---|
| Connector | M12 industrial circular |
| Service counter | Built-in calendar indicates when calibration is due |
| Calibration | Through E2639 or by connecting to SSC configurator |
| Remote sensor probe (option) | Shielded cable up to 5 m length |
| Sensor head dimensions | Ø25 mm, height 54 mm (for MOS sensor)<br>Ø40 mm, height 58 mm (for NDIR sensor) |

## E2639-GSH Dimensions

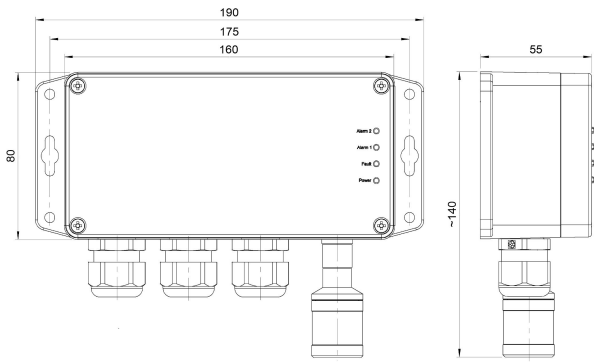


**Version with MOS Smart Sensor**

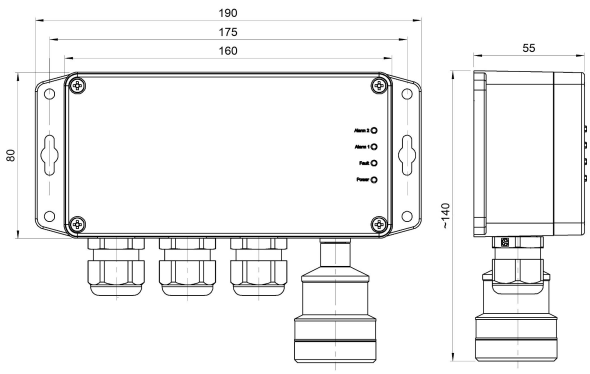


**Version with NDIR Smart Sensor**

## Ordering code for E2639-HFC standard version

| | | | | |
|---|---|---|---|---|
| **Target gas** | R-32, R-134a, R-404A, R-407C, R-410A, R-449A, R-454A, R-454B, R-454C, R-507, R-513A, R-514A, R-1234ze, etc. | | Other (mention refrigerant code) on request | |
| **Sensor type** | -SC (for metal-oxide semiconductor sensor) | -IR (for infrared sensor) | | |
| **Detection range** | -1000 (for 0…1000 ppm) | -2500 (for 0…2500 ppm) | | |
| **WiFi** | -WF (yes) | Leave the field empty (no) | | |
| **Power supply** | -24VDC | -24VAC | -230VAC | |

**Code example:** E2639-HFC-R32-SC-1000-WF-230VAC

## Ordering code for version with Smart Sensor

| **E2639-GSH main unit *** | | | |
|---|---|---|---|
| **WiFi** | -WF (yes) | Leave the field empty (no) | |
| **Power supply** | -24VDC | -24VAC | -230VAC |

* Can be supplied separately

**Code example:** E2639-GSH-WF-24VDC

| **GSH-HFC Smart Sensor *** | | | | |
|---|---|---|---|---|
| **Target gas** | R-32, R-134a, R-404A, R-407C, R-410A, R-449A, R-454A, R-454B, R-454C, R-507, R-513A, R-514A, R-1234ze, etc. | | Other (mention refrigerant code) on request | |
| **Sensor type** | -SC (for metal-oxide semiconductor sensor) | -IR (for infrared sensor) | | |
| **Detection range** | -1000 (for 0…1000 ppm) | -2500 (for 0…2500 ppm) | | |
| **Remote probe (option)** | -RP | Leave the field empty (if no remote probe) | | |
| **Length of remote probe (m)** | -2.5 | -5 | Other length on request | |

* Can be supplied separately

**Code example:** GSH-HFC-R32-SC-1000-RP-5

# Disclaimer

This document is subject to change.

The latest and actual version is located on the Manufacturer's web page.

APL ASIA CO., LTD. Authorized Distributor
Address: 11/129-132 Moo.5 Lamlukka Rd., T.Kookut, A.Lamlukka, Pathumthani 12130 Thailand.
TEL: 0-2995-4461-4
Website: www.apl-asia.com
EMAIL: sales@apl-asia.com
LINE@: @APL-ASIA

evikon.eu