IP65 | 4-20 mA 0-10 V | RS485 Modbus

Ammonia Transmitter
E2618-NH3-P

Features

- Wall-mount or duct-mount version
- Industrial IP65 housing
- Two analog outputs settable to 4-20 mA or 0-10 V
- RS485 Modbus RTU digital interface
- Attached or remote sensor

Specifications

Calibration	Ammonia NH_3
Sensor type	Pellistor (catalytic bead)
Sampling method	Diffusion
Typical detection range	0...15%vol. (0…100%LEL NH_3)
Resolution	0.1%vol. or 1%LEL
Response time T90	≤10 s
Sensor lifetime	> 3 years
Maintenance interval	6 months
Operating temperature	-20...+60°C
Signal update	Every 1 second
Self-diagnostics	Full functionality check at start-up
Warm-up time	≤ 1 min
Power supply	12...36 VDC (default) 24 VAC as option
Power consumption	< 2 VA
Digital interface	RS485, Modbus RTU protocol
Analog outputs	2 × 4-20 mA / 0-10 V, user settable
Output scale width	Recommended: 20-100% of the range; > 10 × resolution in any case Analog output scale can be set according to customer's requirement (e.g. 0…4%vol. NH_3)
Enclosure	Grey ABS plastic, wall mount, protection class IP65
Dimensions	H82 × W80 × D55 mm
Remote sensor probe	Protection IP65, shielded cable default cable length 3.0 m
Operating environment	Industrial indoor and outdoor locations
Operating conditions	(operating temperature is specified above) ≤ 95% RH non condensing; 0.9...1,1 atm Explosion-safe areas; Normal ambient O_2 level; Avoid strong mechanical shock, vibrations, or EMI; Avoid exposure to corrosive gases or silicone containing products.

Wall mount version

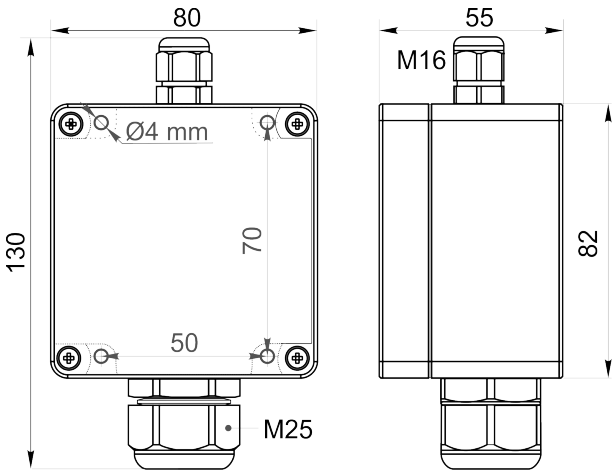

Duct mount version

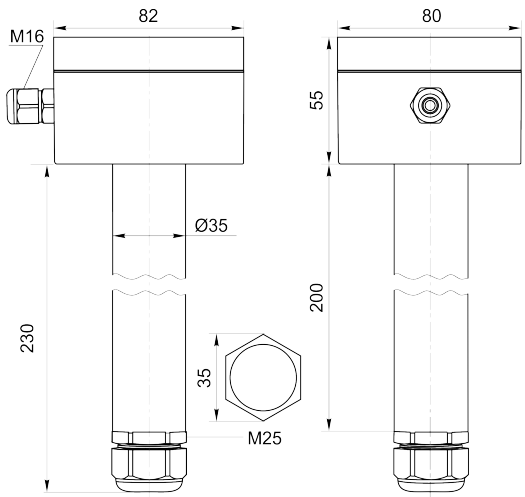

Ask for other versions or custom designed products

Connection diagram

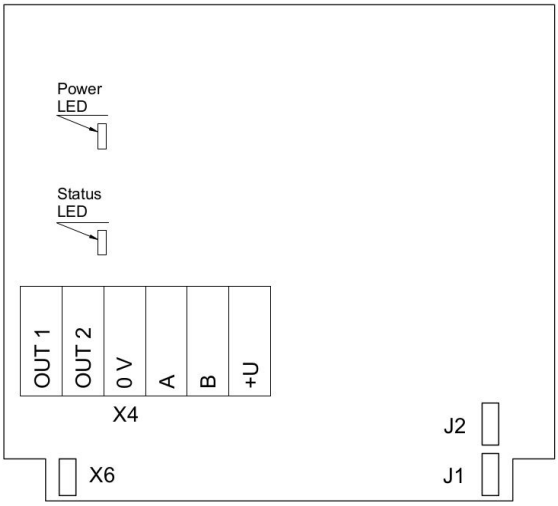

PCB without PSU and relays

Jumpers

J1	OUT1 type (open: 4-20 mA; closed 0-10 V)
J2	OUT2 type (open: 4-20 mA; closed 0-10 V)
X6	Reset Modbus network parameters to default

X4 terminals

OUT1	4-20 mA / 0-10 V output
OUT2	4-20 mA / 0-10 V output
0V	0 V / 24 VAC Neutral (optional)
A	RS485 A / Data +
B	RS485 B / Data -
+U	+24 VDC / 24 VAC Phase (optional)

Remote probe

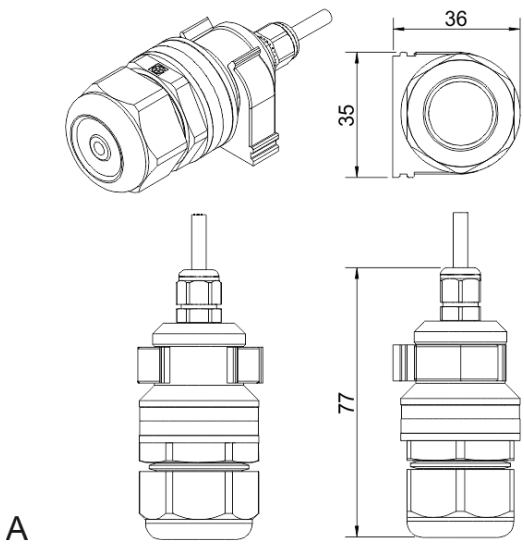

Wall mount remote probe with fixing clamp (default version)

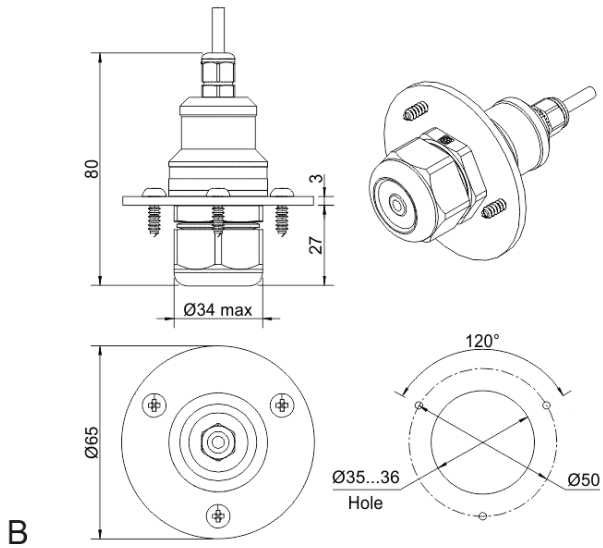

Remote probe with rubber flange and three self-tapping screws (on request)

Authorized Distributor
APL ASIA CO., LTD.
11/129-132 Moo.5 Lamlukka Rd.,T.Kookut, A.Lamlukka, Pathumthani 12130 Thailand.
TEL. 0-2995-4461-4 www.apl-asia.com EMAIL : sales@apl-asia.com LINE@ : @APL-ASIA