HGM - MZ, Halogenated Gases
AGM - MZ, Ammonia Gas
CO_2 - MZ, Carbon Dioxide Gas
Ethylene - MZ, Ethylene Gas
Hydrocarbon - MZ, Propane and Isobutane Gas
N_2O - MZ, Nitrous Oxide Gas

Operating Manual

Multi-Zone | Gas Monitors

Fixed Gas Detection

Order No.: 3015-5074 Rev. 17

WARNING!

Read this manual carefully before using or maintaining the device. The device will perform as designed only if it is used and maintained in accordance with the manufacturer's instructions. Otherwise, it could fail to perform as designed, and persons who rely on this device could sustain serious injury or death.

The warranties made by MSA with respect to the product are voided if the product is not installed and used in accordance with the instructions in this manual. Please protect yourself and your employees by following the instructions.

Please read and observe the WARNINGS and CAUTIONS inside. For additional information relative to use or repair, call 1-800-763-4666 during regular working hours.

The Declaration of Conformity can be found under the following link: https://www.myBacharach.com

MSA is a registered trademark of MSA Technology, LLC in the US, Europe and other Countries. For all other trademarks visit https://us.msasafety.com/Trademarks.

MSA - The Safety Company
1000 Cranberry Woods Drive
Cranberry Township, PA 16066
USA
Phone: 1-800-MSA-2222

MSA Bacharach
621 Hunt Valley Circle
New Kensington, PA 15068
USA
Phone: 1-800-763-4666

For your local MSA Bacharach contacts, please go to our website www.myBacharach.com

© MSA 2022. All rights reserved

Contents

1 MSA Permanent Instrument Warranty 5
1.1 Warranty 5
1.2 Exclusive Remedy 5
1.3 Exclusion of Consequential Damage 5
1.4 Liability Information 5

2 Introduction 6
2.1 Warning and Caution Conventions 6
2.2 Safety Precautions 6
2.3 General Notices 7
2.4 Key Hardware Components 8
2.5 Functional Overview 8
2.6 Specifications 11

3 Installation 14
3.1 Installation Considerations 14
3.2 Connecting Gas Sample Lines 15
3.3 Interior Components 18
3.4 Electrical Wiring 19
3.5 Connecting Communications Devices 20
3.6 Terminating Multiple Monitors 22
3.7 Connecting to a Building Management System 22
3.8 PC Software 24
3.9 Optional Current Loop Interfaces 25
3.10 Connecting External Alarms 27

4 Setup Programming 30
4.1 Initial Power Up 30
4.2 Data Display Screen 30
4.3 Navigating to the 1st Setup Screen 30
4.4 Navigating to the 2nd Setup Screen 31
4.5 Navigating to the 3rd Setup Screen 34
4.6 Additional Service Features 35
4.7 Establishing the CO2 Sensor Baseline 37

5 General Operation 38
5.1 Functional Overview 38
5.2 The Zone Setup Screen 38
5.3 Navigating to the 2nd Zone Setup Screen 39
5.4 Alarms 40
5.5 System Faults 42
5.6 The Trend Screen 46
5.7 The Calibration Screen 46
5.8 Zone Hold Mode 49
5.9 The Diagnostic Screen 50

6 Maintenance 52
6.1 Replacement Parts Overview 52
6.2 Replacement Parts and Optional Accessories 53
6.3 Troubleshooting 56

Appendix 1 Recommended Refrigerant Gas Alarm Settings 57

Appendix 2 RSD-485 Communications Protocol 59

Appendix 3 System Menu Map **71**

Appendix 4 Contact Information **73**

1 MSA Permanent Instrument Warranty

1.1 Warranty

MSA, the Safety Company warrants that these products will be free from mechanical defect or faulty workmanship for a period of two (2) years from the date of delivery, provided it is maintained and used in accordance with MSA's instructions and/or recommendations.

This warranty does not apply to expendable or consumable parts whose normal life expectancy is less than one (1) year, such as, but not limited to, nonrechargeable batteries, filament units, filter, lamps, fuses, etc. MSA shall be released from all obligations under this warranty in the event that repairs or modifications are made by persons other than its own or authorized service personnel or if the warranty claim results from physical abuse or misuse of the product. No agent, employee, or representative of MSA has any authority to bind MSA to any affirmation, representation, or warranty concerning the goods sold under this contract. MSA makes no warranty concerning components or accessories not manufactured by MSA, but will pass on to the Purchaser all warranties of manufacturers of such components.

THIS WARRANTY IS IN LIEU OF ALL OTHER WARRANTIES, EXPRESSED, IMPLIED, OR STATUTORY, AND IS STRICTLY LIMITED TO THE TERMS HEREOF. SELLER SPECIFICALLY DISCLAIMS ANY WARRANTY OF MERCHANTABILITY OR OF FITNESS FOR A PARTICULAR PURPOSE.

1.2 Exclusive Remedy

It is expressly agreed that the Purchaser's sole and exclusive remedy for breach of the above warranty, for any tortious conduct of the Seller, or for any other cause of action, shall be the repair and/or replacement at the Seller's option of any equipment or parts thereof, which after examination by the Seller is proven to be defective. Replacement equipment and/or parts will be provided at no cost to the Purchaser, F.O.B. Seller's Plant. Failure of the Seller to successfully repair any nonconforming product shall not cause the remedy established hereby to fail of its essential purpose.

1.3 Exclusion of Consequential Damage

The Purchaser specifically understands and agrees that under no circumstances will the Seller be liable to the Purchaser for economic, special, incidental, or consequential damages or losses of any kind whatsoever, including but not limited to, loss of anticipated profits and any other loss caused by reason of nonoperation of the goods. This exclusion is applicable to claims for breach of warranty, tortious conduct, or any other cause of action against the Seller.

1.4 Liability Information

MSA accepts no liability in cases where the device has been used inappropriately or not as intended. The selection and use of the device are the exclusive responsibility of the individual operator. Product liability claims, warranties, and guarantees made by MSA with respect to the device are voided if the device is not operated, serviced, and/or maintained in accordance with the instructions in this manual.

The warranties made by MSA with respect to the product are voided if the product is not used and serviced in accordance with the instructions in this manual. Please protect yourself and others by following them. We encourage our customers to write or call regarding this equipment prior to use or for any additional information relative to use or repairs.

2 Introduction

Thank you for investing in a Multi-Zone Gas Monitor. To assure operator safety and the proper use of the monitor please read this manual. It provides important information on the installation, operation, maintenance, and servicing of the monitor and display module.

2.1 Warning and Caution Conventions

When used in this manual or as labeled on the gas monitor, the following hazard symbols and/or associated words are defined as follows:

- **WARNING:** Indicates a hazardous situation that, if not avoided, could result in death or serious injury.
- **CAUTION:** Indicates a hazardous situation that, if not avoided, could result in minor or moderate injury.
- **NOTICE:** The use of the word Notice in this manual calls attention to a procedure, practice, or condition, which if not correctly performed or adhered to, could result in incorrect performance of or damage to equipment, and may void the warranty. Indicates information considered important, but not hazard-related (e.g. messages relating to property damage).

2.2 Safety Precautions

The Multi-Zone Gas Monitor, hereafter referred to as "the device," is a gas monitor intended for indoor use, providing continuous monitoring of gas levels in up to 16 separate test zones.

⚠ WARNING!

- Install, operate, and maintain the device in strict accordance with its labels, cautions, warnings, instructions, and stated limitations.
- For any maintenance procedure provided in this manual, use only genuine MSA Bacharach replacement parts. Repair or alteration of the Multi-Zone Gas Monitor system beyond the scope of these maintenance instructions or by anyone other than authorized service personnel can cause incorrect operation of the device. For a list of approved parts and how to order them, refer to Replacement Parts Overview.
- The device is not intrinsically safe. Do not use the device in areas classified as hazardous or locations where explosive concentrations of combustible gases or vapors can occur.
- This is not a safety device. Some gases which this instrument can detect may be combustible or flammable. When properly configured, this instrument is designed to alarm at concentrations that are lower than the explosive limit of the gas. As such, it is the buyer’s responsibility to initiate an immediate planned response to any gas leaks as soon as they are detected. This equipment should never be used to measure or sample gases at or above their respective lower explosive limits.
- The device is intended for indoor use only. Do not use the device for outdoor applications.
- Install a circuit breaker for the incoming power connections of the device. Put the circuit breaker in a location that is easy to access and near the device. Clearly mark the circuit breaker as the disconnecting unit for the device.
- Never operate the device without a connection to positive ground. Failure to connect the device to positive ground can result in electrical shock. Electrical shock can cause damage to the device and injury to personnel.
- Make sure the device is not located in areas that contain a flammable mixture of gas and air. Otherwise, an explosion can occur.
- Properly vent the exhaust of the monitor to a safe area. Improper venting of the exhaust can cause serious personal injury or death.
- Extreme care must be exercised when accessing the interior of the monitor. Only qualified electrical maintenance personnel may make connections and perform adjustments. Always remove AC power before opening the monitor's enclosure.
- The protection provided by the monitor may be impaired if the monitor is used in a manner not specified by this manual. Modifications to this monitor, not expressly approved, will void the warranty.
- Do not continue to use this equipment if there are any symptoms of malfunction or failure. In the case of such occurrence, de-energize the power supply and contact a qualified repair technician or the nearest Bacharach Service Center.

- This device uses type "F" fuses (F1 and F2) rated at 1.0 A, 250 VAC. Replace ONLY with MSA-approved fuses.
- Electrical installation must be performed by a certified electrician, and must comply with all applicable NEC/CEC and local electrical safety codes.
- Make sure the device is installed in a clean, dry area that is protected from vibration, including but not limited to a chiller, and heat sources.
- Do not paint the device. Do not paint near any of the sample line inlets. If painting is done near the device, make sure that paint is not deposited on the sample inlet fittings. Paint deposits can prevent correct operation of the device.
- Ensure the sample inlet lines to the device are clean and noncondensing.
- Avoid use of the device where condensation can collect. Condensation can clog or block sample lines, which will prevent the device from receiving new or fresh gas samples in the area being monitored.
- Install and maintain end-of-line filters in all sample inlet lines.
- The only absolute method of ensuring correct overall operation of a gas detection instrument is to do a check with a known concentration of the gas for which it has been calibrated. Do a calibration check as part of the installation and initial setup.
- To clean the outside of the case, use a dry cloth. To avoid shock hazard and/or equipment damage, DO NOT use soap and water.
- Perform periodic leak tests on all sample lines.

Failure to follow these warnings can result in serious personal injury or death.

2.3 General Notices

NOTICE

- The gas monitor uses a universal power supply that is capable of accepting inputs of 100 to 240 VAC, 50/60 Hz. The monitor’s power consumption is 20 Watts. It is highly recommended that the monitor be connected directly to the AC power source, preferably on its own circuit with UPS or surge protection.
- Use ONLY the provided knockouts for electrical and communications wiring. Drilling into the box will void the warranty.
- This device is classified as Installation Category II, Pollution Degree II, as defined by UL.
- This device is designed for operation at or below an altitude of 6,562 ft (2,000 m). Do not operate this device above this altitude limit.

2.4 Key Hardware Components

Figure 1 Multi-Zone Monitor Front View

NOTICE

Mounting cutouts are located on the back of the monitor and are visible from inside the Multi-Zone monitor. A mounting template is also shipped with the monitor. For mounting information, refer to Section3 Installation.

Standard Accessories for a 4-Point System

QTY	Description	Part Number
5	Line-End Filters	3015-3420
1	Charcoal Filter (Halogen Gas Monitor Only)	3015-3125
3	End-of-line Water-Stop Filter Assembly	3015-5512
1	T-Bolt Bracket (Halogen Gas Monitor Only)	3015-2969
1	Multi-Zone Instruction Manual	3015-5074

2.5 Functional Overview

2.5.1 General Description

Gas monitors are specified to support compliance to federal, state and local safety codes governing emissions. Avoiding significant loss reduces equipment replacement costs, maintains equipment efficiency, promotes safety, and protects the environment.

The MSA Bacharach Multi-Zone Monitor provides continuous monitoring of gas levels in up to 16 separate test zones. The instrument is easily programmed to monitor a variety of gases (dependent on particular model) and independent leak (small), spill (medium), and evacuation (large) levels may be designated for each zone. The instrument also retains a log of previous readings that can be easily accessed for analysis.

An audible alarm and front panel indicators are provided to signal alarm and fault conditions, and relay contacts are provided that can be used to trigger external alarm devices in the event of a system fault, or if a leak (small), spill (medium), or evacuation (large) level of gas is detected. The system also may be fitted with and optional two-channel 4-20 mA current loop board for connection to remote monitoring equipment.

The multi-zone monitor requires only minor periodic maintenance such as the occasional replacement of filters. The monitor incorporates active diagnostics that continuously check the system for proper operation. A front panel indicator is provided to alert an operator of system malfunctions, and fault codes are generated that enable the user to identify the cause of the fault.

2.5.2 Communications Options

The multi-zone monitor features full two-way communications via an RS-485 interface. MODBUS RTU is the communications protocol standard. The instrument can be connected directly to a Building Management System or it may be operated as a stand-alone system.

An RS-232C port is also provided for connection to a PC. This enables the monitor to be setup from a personal computer. Refer to Appendix 2 RSD-485 Communications Protocol for more information on communications protocols.

2.5.3 Understanding Monitoring Levels

Effective use of this instrument requires an understanding of what constitutes reasonable alarm set points for the types of gas being monitored. Manufacturers define allowable exposure levels and threshold limit values in units of parts per million (ppm). In a good “tight” installation these background levels will be acceptably low and often do not require corrective action. You can reduce nuisance alarms and needless service calls if the alarm levels are set at practical limits. MSA Bacharach has developed recommended monitoring refrigerant gas levels based on compliance to ANSI/BSR ASHRAE 15-2007 and ASHRAE Safety Code 34-2007. These reference levels are listed in Appendix 1 Recommended Refrigerant Gas Alarm Settings.

Setting the monitor at these recommended alarm levels will satisfy the needs of most users. However, the ppm levels generated by system leaks into the environment are greatly influenced by the volume of air in the sampling area, air circulation, size of the leak, distance to the monitoring point, and a host of other variables. In some cases the set points may need to be adjusted either up or down to achieve effective monitoring.

2.5.4 Response to the Presence of Multiple Refrigerants (HGM Only)

The HGM-MZ is a refrigerant level monitor, not a gas analyzer. You must program the monitor to test for a specific refrigerant, and it will only return accurate concentration readings for that particular refrigerant. If a leak occurs of another refrigerant gas type, the monitor may return incorrect readings.

If there is a possibility of multiple refrigerants leaking in the same sampling zone, then you should carefully consider which refrigerant compound you program the unit to monitor.

2.5.5 Location of Sampling Points

At the point of a leak the gas is nearly pure. As the gas is dispersed into the air, the gas molecules diffuse, causing a dilution of the original concentration. The monitor measures the concentration at the sample collection point. Therefore, if the termination of the collection line is not at the exact point of the leak, the unit will read a diluted mixture of the gas and air.

Gases of interest may be heavier or lighter than air and may collect above or below the point of the leak. Therefore sampling point placement is critical and must take into account properties of the target gas and air flow within the space. In general, sampling points must be located as close as possible to the sources of potential leaks. If this is impractical, then alarm set points for that zone must be adjusted to compensate for the dilution of the gas. General placement guidelines are shown in 3.2.5 Connecting Sample Intake Lines, but air-flow dynamics must also be considered (e.g., consider the effects of exhaust fans which tend to draw target gas from the space).

DO NOT block any of the zones. Unused zones may be disabled by setting the distance parameter to zero feet in the zone setup screen.

The MZ monitor should be centrally located in the mechanical room and be readily accessible for easy visual monitoring and servicing. The combined length of sample tubing plus exhaust tubing cannot exceed 1200 ft (366 m) for any zone. The fresh air purge line must draw from an area that does not contain any gas other than fresh air. The exhaust line must run to an outside location if possible.

NOTICE

The combined length of the purge line and the exhaust line cannot exceed 500 feet.

Ideally, two to three pick up points spaced around each chiller will provide sufficient coverage. It may be necessary to perform a smoke test of the mechanical room to determine the best locations. The smoke test provides the pattern of air currents present in the mechanical room.

The MZ monitor must be kept dry. When used in a wet or humid area, it is highly recommended to use the optional water stop accessory to avoid internal damage.

2.5.6 Locating a Remote Display (Optional)

The Remote Display (RD) Module should be mounted outside of the mechanical room, or just inside the room's doorway if the first option isn't possible. This is the "split architecture design" for safety of the operator. The RD can be located up to 4500 feet (1372 m) from the MZ monitor. The RD is the man machine interface by which you program the MZ, acknowledge alarms and observe conditions inside of the mechanical room. Note that there are two additional alarm relay contacts in the RD that can be programmed to alarm on leak, spill, evacuate, fault, or monitor on conditions.

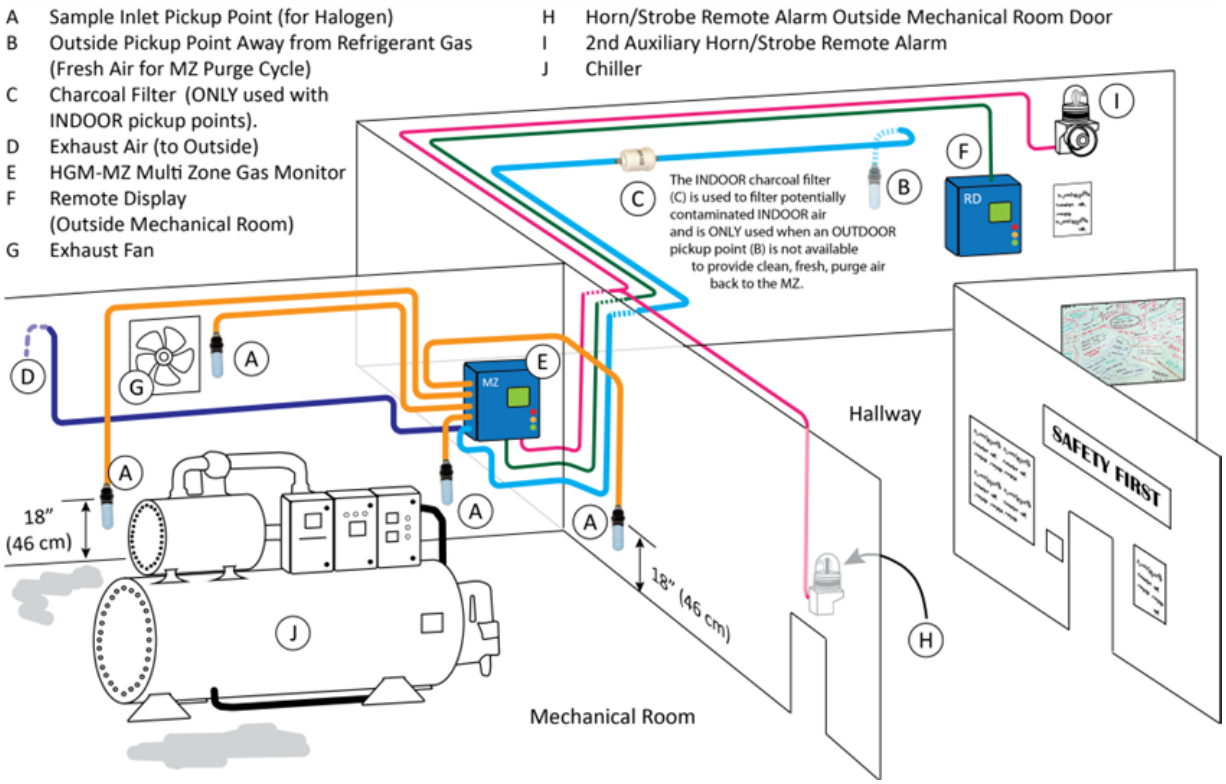

Figure 2 HGM-MZ (Halogen) and RD Placement in a Mechanical Room

NOTICE

The pickup points located on the floor in the above illustration are examples for refrigerants which are heavier than air. Placement of pickup points should be determined based on characteristics of the gas being monitored and ambient conditions of the sampling area. (Air=28.9 g/mole, CO_2=44.0 g/mole, NH_3=17.0 g/mole, and halogens = 100+ g/mole.)

2.6 Specifications

HGM-MZ Specifications	
Product Type	Multiple refrigerant gases and multiple area monitoring system for low level continuous monitoring of CFC, HCFC and HFC refrigerant gases used in most commercial refrigeration systems. System design supports compliance to the refrigerant monitoring requirements of ANSI/BSR ASHRAE 15-2007 and ASHRAE Safety Code 34-2007.
Sensitivity	All gases 1 ppm (excluding R-11, R-22 and R-113).
Measuring Range	All gases 0 to 10,000 ppm.
Accuracy[1]	1 ppm Minimum Detectable Level (MDL) (most gases) ±1 ppm ±10% of reading from 0-1,000 ppm ±1 ppm ±2% of reading from 0-1,000 ppm with field calibration (most gases) ±10 ppm ±15% of reading from 0 – 1,000 ppm (R-11, R-21, R-32, R-113)
Gas Library	**CFC:** HFP, R-11, R-12, R-113, R-114, R-502 **HFC:** R125, R-134a, R236fa, R245fa, R32, R-404A, R-407A, R-407C, R-407F, R-410A, R422A, R422D, R427A, R-507, R-508B **HCFC:** R-123, R-124, R21, R-22, R227, R-23, R-401A, R-402A, R-402B, R-408A, R-409A, R-500, R-503 **Halon:** H1211, H1301, H2402 **Other:** FA188, FC72, R-1234yf, R-1234ze(E), N1230, N5110, N7100, N7200, N7300, N7600, R-424A, R-426A, R-438A, R-1233zd(E), H1336E, H1336Z, R-1224yd(Z), FC-3284. N4710, R-448A, R-449A R-513A, R-452A, R-452B, R-514A, R-454A, R-454B, R-454C, R-455A, CUSTOM
1 - At reference environmental conditions (25 °C, 45% RH non-condensing, 1 ATM)	

AGM-MZ Specifications	
Product Type	The AGM-MZ provides multiple area monitoring system for low level continuous monitoring of Ammonia gases used in most commercial systems.
Sensitivity	20 ppm
Measuring Range	25 to 10,000 ppm
Accuracy[1]	±10 ppm ±10% of reading from 0 - 10,000 ppm
Gas Library	Ammonia (NH_3) / R-717
1 - At reference environmental conditions (25 °C, 45% RH non-condensing, 1 ATM)	

CO_2-MZ Specifications	
Product Type	The CO_2-MZ provides multiple area monitoring for low level continuous monitoring of carbon dioxide gases used in most commercial systems. System design supports compliance to the gas monitoring requirements of ANS/BSR ASHRE 15-1994.
Sensitivity	10 ppm
Measuring Range	300-8,000 ppm
Accuracy[1]	±5 PPM ±5% of reading from 0 – 1,000 ppm ±10% of reading from 1,001 - 4,000 ppm ±15% of reading from 4,001 - 8,000 ppm
Gas Library	Carbon Dioxide (CO_2)/R-744

1 - At reference environmental conditions (25 °C, 45% RH non-condensing, 1 ATM)

ETHYLENE-MZ Specifications	
Product Type	The Ethylene-MZ provides multiple area monitoring system for low level continuous monitoring of Ethylene gas used in greenhouse and fruit ripening applications.
Sensitivity	10 ppm
Measuring Range	10-10,000 ppm
Accuracy[1]	±10ppm ±15% of reading 10-3000ppm
Gas Library	Ethylene (C_2H_4) / R-1150

1 - At reference environmental conditions (25 °C, 45% RH non-condensing, 1 ATM)

HYDROCARBON-MZ Specifications	
Product Type	The Hydrocarbon-MZ provides a multiple area monitoring system for low level continuous monitoring of Hydrocarbon gases (Propane/R-290 and Isobutane/R-600) when used in refrigeration systems.
Sensitivity	5 ppm
Measuring Range	5-5,000 ppm
Accuracy[1]	±5ppm ±10% of reading 5-5000ppm
Gas Library	Propane/R-290 and Isobutane/R-600

1 - At reference environmental conditions (25 °C, 45% RH non-condensing, 1 ATM)

NITROUS OXIDE-MZ Specifications	
Product Type	The Nitrous Oxide-MZ provides a multiple area monitoring system for low level continuous monitoring of Nitrous Oxide/N_2O for medical gas and process applications.
Sensitivity	2 ppm
Measuring Range	2-2,000 ppm
Accuracy[1]	±1ppm ±10% of reading 2-2000ppm
Gas Library	Nitrous Oxide/N_2O

1 - At reference environmental conditions (25 °C, 45% RH non-condensing, 1 ATM)

General Multi-Zone Specifications	
Coverage	4 point standard, expandable to 16 points in 4 point increments
Detector Type	Infrared Non-Dispersive
Front Panel (3 Indicator Lights)	• Green: Monitor is powered on. LED glows during normal operation; flashes when unit is in warm-up mode • Red: Alarm. LED flashes when any point has exceeded the alarm setting. • Yellow: Fault. LED flashes when there is a system fault
Size (H x W x D)	12.23" x 13.7" x 4.96" (31.06 cm x 34.80 cm x 12.60 cm)
Weight	15 lbs. (6.8 kg)
Sampling Mode	Automatic or manual (hold)
Re-Zero	Auto or on zone change
Cycle Time	5 to 315 seconds – depending on air line length and number of zones (100FT of 0.250” OD X 0.170” ID air line: 20 seconds)
Sensitivity Threshold	1 ppm to 10,000 ppm
System Noise	Less than 40 dB(A) @ 10 feet (3m)
Monitoring Distance[1]	Typical Installation <500ft (153M) of sample + exhaust line (each zone).
Conditioned Signal	Dual optional 4-20 mA DC isolated outputs. Channel 1 = zone area, Channel 2 = PPM
Alarms	Four SPDT alarm contacts rated 2A at 250 VAC (inductive) 5 A at 250 VAC (resistive). Three are assigned to PPM level alarms, one assigned to system faults.
Alarm Range	0 ppm to 65,535 ppm
Alarm Defaults - (HGM-MZ)[2]	LEAK Alarm: 100 ppm | SPILL Alarm: 300 ppm | EVACUATE Alarm: 500 ppm
Communications	Full two-way communications with Remote Display Module or Building Management System via RS-485 serial interface. RS-232C communications port standard.
Power Safety Mode	Fully automatic system reset. All programmed parameters retained.
IP Rating	IP20
Operating Temp	32 to 122 °F (0 to 50 °C)
Ambient Humidity	5% to 90% RH (non-condensing)
AC Power	100 to 240 VAC, 50/60 Hz, 20 W
Certification	UL 61010-1, CAN/CSA 22.2 No. 61010-1 & CE Mark, EN 14624:2020, EN 378:2016[3]
Warranty	2 years from date of shipment
Altitude Limit	6,562 ft (2,000 m)
Sensor Life	7-10 years

1 – Sample + Exhaust line cannot exceed 1200ft (366M)

2 – See Appendix 1 Recommended Refrigerant Gas Alarm Settings

3 – A1 gases only

3 Installation

3.1 Installation Considerations

3.1.1 Cautions and Warnings

WARNING!

- Explosion hazard! Do not mount the MZ monitor in an area that may contain flammable liquids, vapors, or aerosols. Operation of any electrical equipment in such an environment constitutes a safety hazard.
- Shock hazard! Always disconnect AC power before working inside the monitor.

Failure to follow these warnings can result in serious personal injury or death.

CAUTION!

The MZ monitor contains sensitive electronic components that can be easily damaged. All internal adjustments or service must be done by an authorized service representative.

Failure to follow this caution can result in minor or moderate injury.

NOTICE

Drilling holes in the MZ enclosure may damage internal components and will void the warranty. Please use the knockouts provided for electrical connections.

3.1.2 Inspection

The MZ monitor has been thoroughly inspected and tested prior to shipment from the factory. Nevertheless, it is recommended that the monitor be re-checked prior to installation. Inspect the outside of the enclosure to make sure there are no obvious signs of shipping damage. Open the enclosure and inspect the interior of the monitor for loose components that may have become dislodged during shipment. If damage is discovered, please contact the nearest Bacharach Service Center for assistance.

3.1.3 Location of the Monitor

The MZ monitor should be centrally located in the facility and should be easily accessible for visual monitoring and servicing. Combined length of the intake sample line and the exhaust line cannot exceed 1200 feet (366 m) in length. It is important to remember that sampling cycle time is proportional to the total number and length of individual sample lines.

Dirt, grease, and oils can adversely affect the operation of the MZ monitor. The monitor must be installed out of direct sunlight in a clean, dry area that is not subject to temperature or humidity extremes. Installation of the monitor in a mechanical room is acceptable provided reasonable environmental conditions exist. If there is a question, consider installing the unit outside of the mechanical room in a cleaner area of the facility.

NOTICE

The mounting location of the monitor should allow it to be easily accessible for visual monitoring and servicing.

3.1.4 Mounting Instructions

NOTICE

The MZ monitor should be installed plumb and level and securely fastened to a rigid mounting surface.

The enclosure utilizes keyhole mounting brackets designed for ¼ inch fasteners. Locate the four screws as shown in the diagram below or by using the provided mounting template (P/N 3015-5109). Allow the screw heads to protrude approximately ¼ inch.

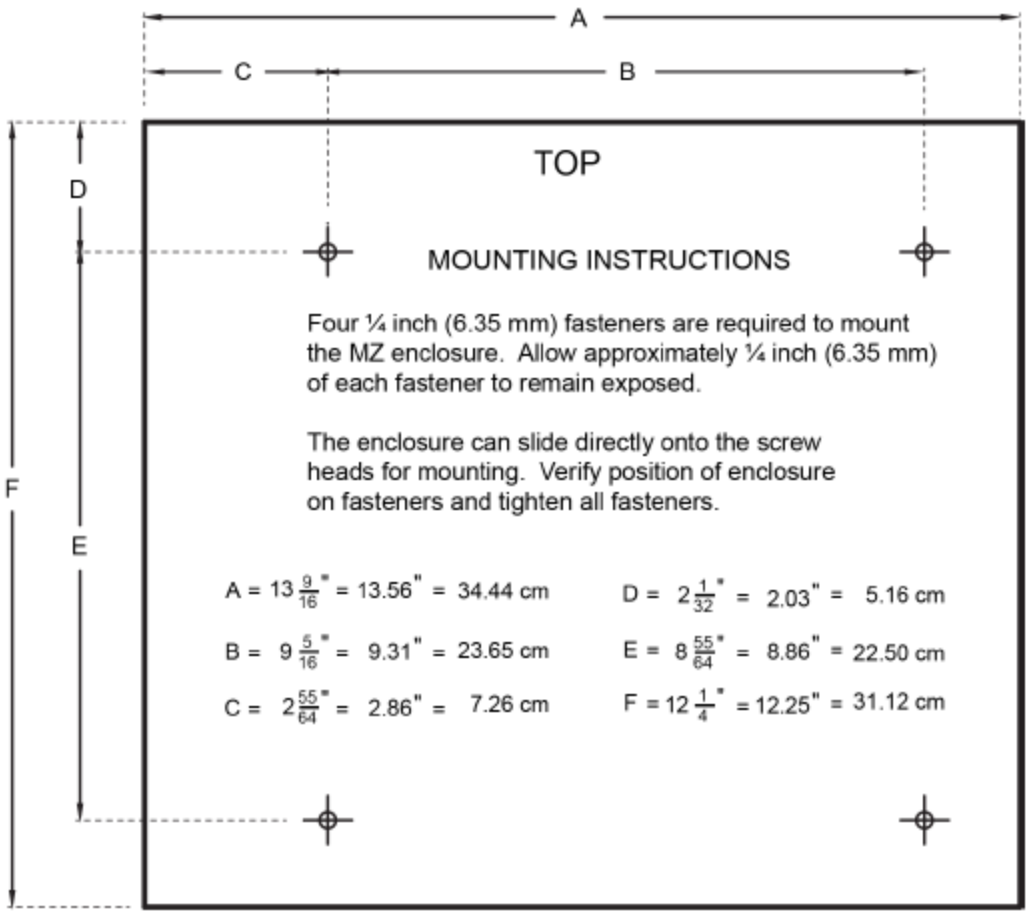

Figure 3 MZ Monitor Mounting Specifications

Hold the monitor flat against the mounting surface and allow it to slide down, engaging the screw heads in the keyhole slots of the mounting brackets. Adjust the screws as necessary to hold the monitor securely against the mounting surface.

3.2 Connecting Gas Sample Lines

3.2.1 Overview

Individual gas sample lines are run from the MZ monitor to each area of the facility to be monitored. Additionally, a purge line is installed to provide clean air for resetting the infrared zero baseline. All air, sample, and purge line connections are located on the left side of the enclosure. Refer to the illustration below.

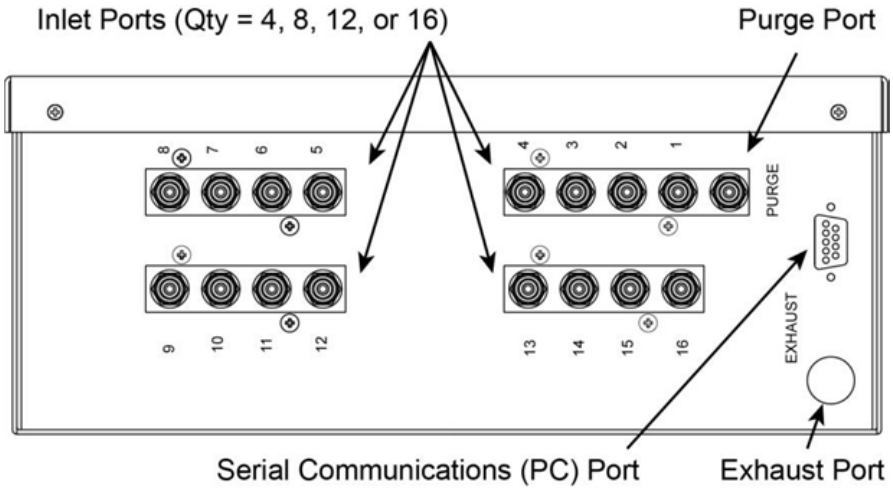

Figure 4 MZ Monitor Side View

3.2.2 Tubing Considerations

Use ¼” (6.35 mm) outside diameter (0.040” or 1.016 mm wall) flex tubing for all air lines (P/N 3015-3235) or equivalent. The tubing should be clean and free of residual moisture or other contaminants. The tubing should be cut cleanly with a sharp knife and care should be taken not to distort the tubing end.

To connect the air lines to the monitor simply push the tubing firmly onto the connector. To remove a line, press the plastic ring on the connector with one hand, then withdraw the tube with your other hand. The Multi-Zone monitor uses push-to-connect (PTC) style connectors.

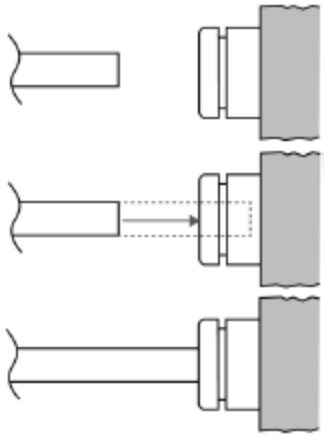

Figure 5 Using PTC Connectors: Connecting

To insert sample lines, firmly push the appropriate tubing into the hole in the center of the connector until it seats in the connector. Refer to the figure above.

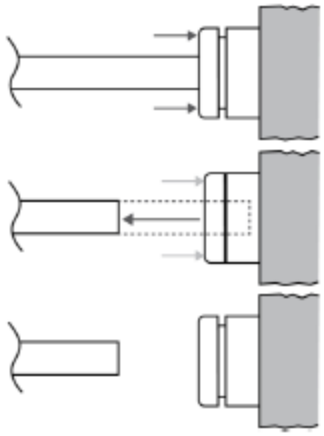

Figure 6 Using PTC Connectors: Disconnecting

To remove tubing from a PTC connector, push and hold the spring-loaded collar inwards, then simultaneously withdraw the tubing. Refer to the figure above.

All tubing bends should have a radius of no less than 5” (12.7 cm) to ensure proper airflow. If kinks or obstructions occur in any of the air lines the instrument may not function properly.

	Recommended Purge, Exhaust, Sample Line Lengths	Recommended Not to Exceed
Purge	100 ft	300 ft
Exhaust	100 ft	300 ft
Sample	300 ft/line	1200 ft
NOTE: Combined length of sample and exhaust lines <1200 ft maximum.		

3.2.3 Connecting Purge Line

A purge line is an intake line that is required to draw fresh air into the instrument. It is advisable to terminate the purge line outdoors, provided the inlet is not exposed to rain, snow, ice, exhaust fumes, or other airborne contaminates. If an outdoor installation is impractical, the line must be run to an area inside the facility that you are certain is not contaminated with ambient gas. If this is not possible, an optional charcoal filter assembly (P/N 3015-3125) can be used with the Halogen and Hydrocarbon Gas Monitors to filter refrigerant from the purge line. It may be mounted adjacent to the monitor. A line-end filter (P/N 3015-3420) should be attached to the end of the purge line when the charcoal filter is not used. Note that the charcoal filter option must NOT be used in ammonia, CO_2, N_2O or Ethylene instruments.

⚠ WARNING!

Mounting the purge line in a space with a gas concentration and without a charcoal filter could result in lower concentration readings than normally expected.

Failure to follow this warning can result in serious personal injury or death.

NOTICE

(CO_2 Only): Because CO_2 is present in ambient air, the purge line MUST BE run outside, away from any known sources of CO_2 gas. An atmospheric CO_2 concentration value can be manually entered by the user in the CAL screen. See 5.7.5 CO2 Atmospheric Concentration.

3.2.4 Connecting Exhaust Line

An exhaust line can be used when it is required to vent gas samples away from the instrument. The exhaust line should terminate in a location that is completely isolated from the purge line termination point and other areas of the facility that will be monitored. Ideally this line should terminate outdoors in a location that is not exposed to the elements. This line does not require a line-end filter. If the exhaust line terminates outside the building, position the tubing so that no water or moisture can enter it.

3.2.5 Connecting Sample Intake Lines

The MZ monitor is designed to accommodate up to 16 separate sample intake lines. The standard configuration of the unit includes one manifold of 4 intake connectors and 1 purge connector. Additional manifolds can be easily installed to increase monitoring capacity (field installation kit P/N 3015-5171, and 4 zone line end filter kit P/N 3015-3411).

All line terminations should be positioned to reduce the possibility of mists, aerosols, oil, water, dust, or other contaminates being drawn into the instrument. A line-end filter (P/N 3015-3420) should be attached to the end of each sample intake line. General placement guidelines are shown below, but exhaust fans drawing ambient air out of the space should also be monitored for gas concentrations.

• HGM-MZ Halogen	Mount sampling points 6-18 inches above floor.
• ETHYLENE-MZ Ethylene	Mount sampling points 6-18 inches above floor.
• AGM-MZ NH_3 (Ammonia)	Mount sampling points 1-2 feet below ceiling.
• CO_2-MZ CO_2 (Carbon Dioxide)	Mount sampling points 4-6 feet above floor (breathing zone).
• Hydrocarbon-MZ (R-290, R-600a)	Mount sampling points 6-18 inches above the floor.
• Nitrous Oxide-MZ (N_2O)	Mount sampling points 4-6 feet above floor (breathing zone).

NOTICE

DO NOT block or physically plug any of the zones. This will result in pressure faults. Unused zones may be disabled by setting their length parameter to zero in the zone setup screen 10.

Depending on type of use and location of lines, the end-of-line water stop filter assembly can be used to prohibit moisture from entering the intake lines. Three (3) end-of-line water stop filters are supplied with a standard unit. Place the end of the intake line into the blue receiver of the end of line water stop and tighten sufficiently.

NOTICE

Only one filter assembly, either the line-end filter or end-of-line water stop, should be used for each line.

Please refer to 2.5.5 Location of Sampling Points to learn more about where to place the ends of the sample intake lines.

3.2.6 Connecting the Water Trap

A water trap is required for applications where moisture or condensation frequently enter the intake line. This water trap (P/N 0007-1655) is manually emptied once it has become filled. Install the water trap close to the unit for the most effective results. The intake line may be cut where the user finds appropriate (preferably close to monitor). Each side of the intake line should be inserted into the receivers on either side of the water trap. Secure tightly. A replacement filter (P/N 0007-1656) for the water trap is available and is replaced by unscrewing the clear plastic cup of the water trap, pulling the filter directly out (do not unscrew), and inserting the new filter into place. Replace the cup of the water trap. If desired, an optional mounting bracket (0007-1657) may be used to secure the water trap in place.

NOTICE

- The termination filter (P/N 3015-3420) or end-of-line water stop filter (P/N 3015-5512) should be used, regardless of the presence of a water trap.
- Extreme or humid temperatures may cause water to condense in the tubes. A water trap is highly recommended for use in these scenarios.

3.3 Interior Components

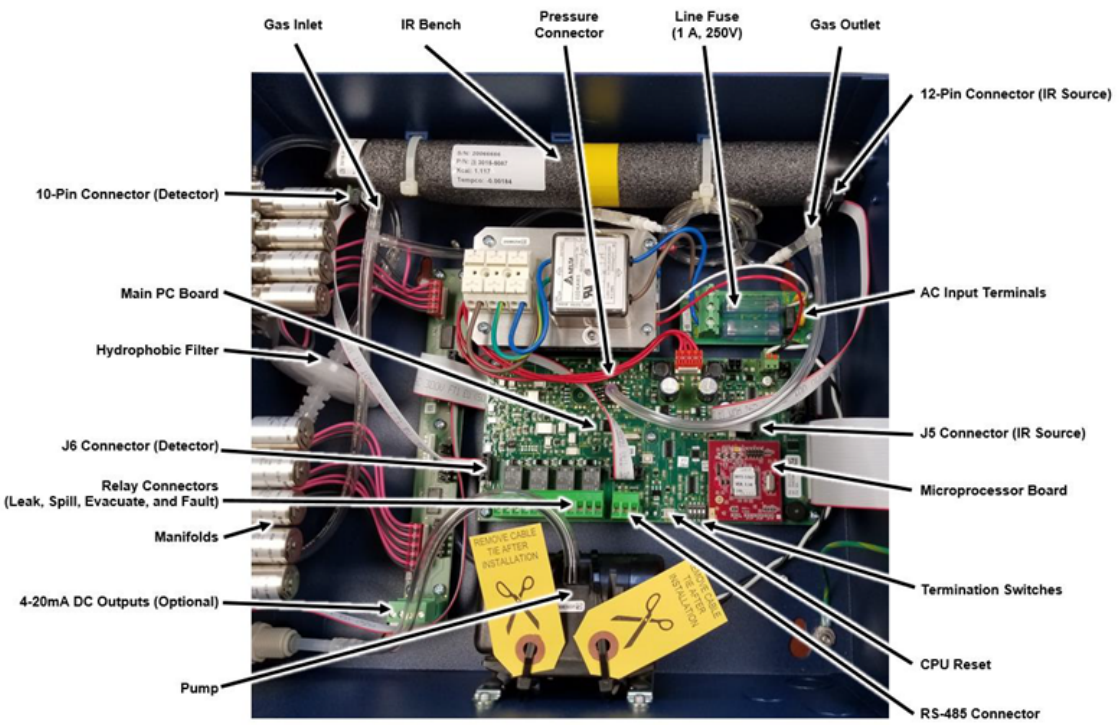

Figure 7 MZ Monitor Interior Components

NOTICE

The plastic cable ties surrounding the air pump are to ensure safe handling during shipping. Please remove before operation. Reinstall a plastic cable around the air pump if the unit is shipped to MSA Safety for service or repair. This prevents damage during shipping.

3.4 Electrical Wiring

The MZ monitor uses a universal power supply that is capable of accepting inputs of 100 to 240 VAC, 50/60 Hz. The monitor's power consumption is 20 Watts. It is highly recommended that the monitor be connected directly to the AC power source, preferably on its own circuit. The AC power connection should be completed with UL listed 3-conductor wire (minimum 16 AWG), rated 300 VAC at 105 °C.

NOTE: Locate a convenient service knockout and install electrical conduit in the typical manner.

1. Locate the AC Input Terminal Block and Ground Stud on the inside of the monitor.
2. Prepare the wiring by stripping the insulation back 3/8" (10 mm).
3. Insert the incoming AC power neutral (white), earth ground, and live (black) wires to the Neutral (N) earth ground, and LINE 1 (L1) terminal locations as shown in Figure 8.
4. Use a screwdriver to depress the Terminal Block contact and fully insert the stripped wire end. The Terminal Block includes two positions for each wire, which may be used to connect other AC powered devices; typical AC external alarm relay 1 wiring shown in 3.10.2 Connection, Figure 19.
5. If required by local electrical codes, use the supplied crimp-on ring terminals, washers, and nut to connect additional grounding to the monitor's Ground Stud.
6. Using the supplied crimp-on ring terminals, washers, and nuts, connect the incoming AC power ground wire (green) to the monitor's AC input ground stud, and then install a separate wire between the ground stud and the GND terminal.

⚠ WARNING!

- Electrical installation must be performed by a certified electrician, and must comply with all applicable NEC/CEC and local electrical safety codes.
- Copper conductors for connection to supply mains must be made in accordance with NEC/CEC and local codes.
- The AC power ground wire must first be connected to the monitor's ground stud. Under no circumstances should this monitor be operated without a protective ground. Doing so poses a potential shock hazard, and is also a violation of electrical safety standards applicable to this type of equipment.

Failure to follow these warnings can result in serious personal injury or death.

NOTICE

Drilling holes in the MZ enclosure may damage the unit and will void the warranty. Please use the knockouts provided for electrical connections.

A switch or circuit breaker rated 1.0 A, 250 VAC must be attached to the monitor's AC power leads. This switch must also be located in close proximity to the monitor, and be in easy reach of the operator. This switch should also be clearly marked as the monitor's main AC disconnect device. The circuit breaker or switch must disconnect all current-carrying conductors (i.e., live and neutral).

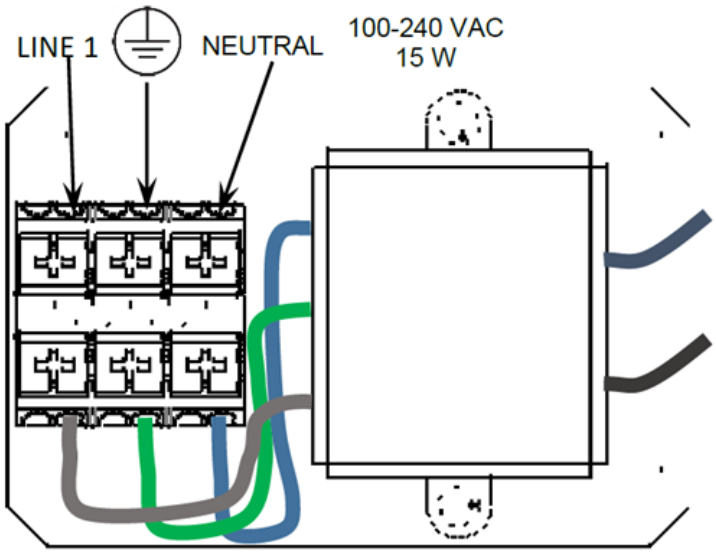

Figure 8 Multi-Zone AC Input Power Connections

3.5 Connecting Communications Devices

3.5.1 Remote Display Module (RD) Connection

The MZ is connected to the optional RD using a shielded twisted pair instrument cable. The maximum distance between the farthest MZ and RD is 4500 feet.

Use any of the remaining service knockouts to gain access to the interior of the monitor. The RS-485 communications wiring between the MZ and RD must be connected in the following manner:

1. Locate the RS-485 connector in the MZ (see 3.3 Interior Components, Figure 7).
2. Connect one lead of a twisted shielded pair to the "B" connection point. Note the wire color.
3. Connect the second wire to the "A" connection point. Note the wire color.
4. Connect the ground to the "GND" connection point.
5. Locate the RS-485 connector marked "TO MONITORS" in the RD (see this topic in the RD manual). This connector is located on the bottom of the RD PC board, second from the right.
6. Run the wire to the RD and connect the twisted shielded pair to the RS-485 "TO MONITORS" connector using the same color code as used on the MZ.

3.5.2 Integrating with Building Management Systems

The MZ may be connected directly to a Building Management System using a shielded twisted pair cable. The cable from the Building Management System is connected to the RS-485 connector inside the MZ monitor. MODBUS RTU is the standard communications protocol.

Use any of the remaining service knockouts to gain access to the interior of the monitor. Locate the RS-485 connector and remove it from the circuit board. Secure the wire leads to the connector orienting them as shown in the diagram below. Check to make sure that the polarity matches the wiring to the Building Management System. When you are through securing the connections, carefully plug the connector back onto the circuit board.

3.5.3 Larger Integrated Systems

You may also connect the MZ monitor to a Building Management System through a Remote Display. In this case, first connect the MZ to the RD as described above. Then, follow the instructions in the Communications Connections section of the RD manual for information on how to connect the RD to a Building Management System.

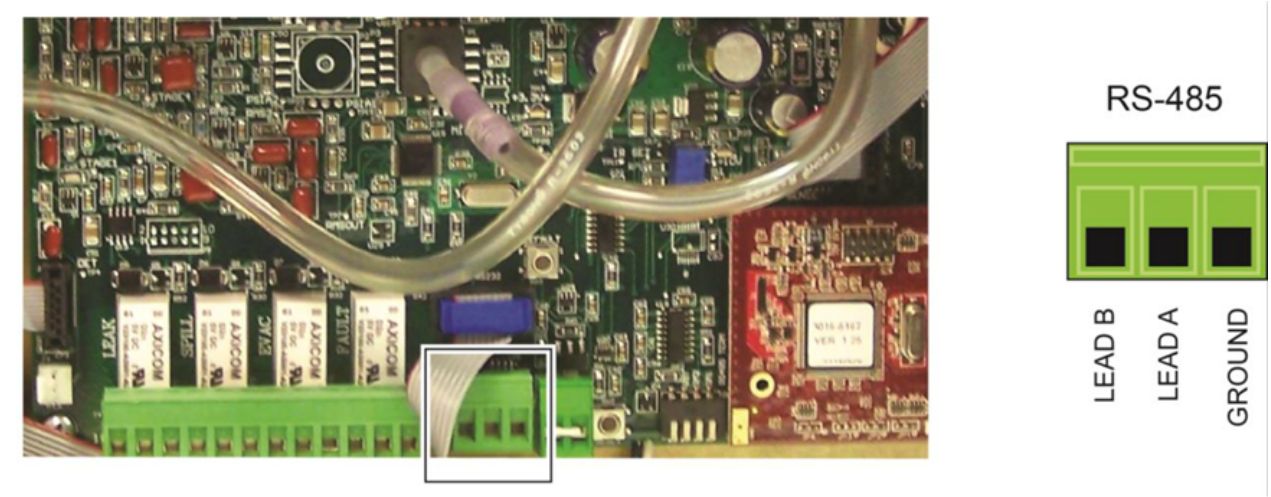

Figure 9 RS-485 Connector

3.5.4 Changing Terminator Switch Settings

The terminator switch is shipped from the factory in the “OUT” position (no termination). This is the correct setting if the MZ is to be installed in the middle of a network. If the MZ monitor is connected as a single device or if it is the last device on the network chain, the terminator must be moved to the “IN” position.

Locate switch #4 and determine its position. If it must be moved, slide the switch to the appropriate position. (Note that switches 1-3 are for service use.)

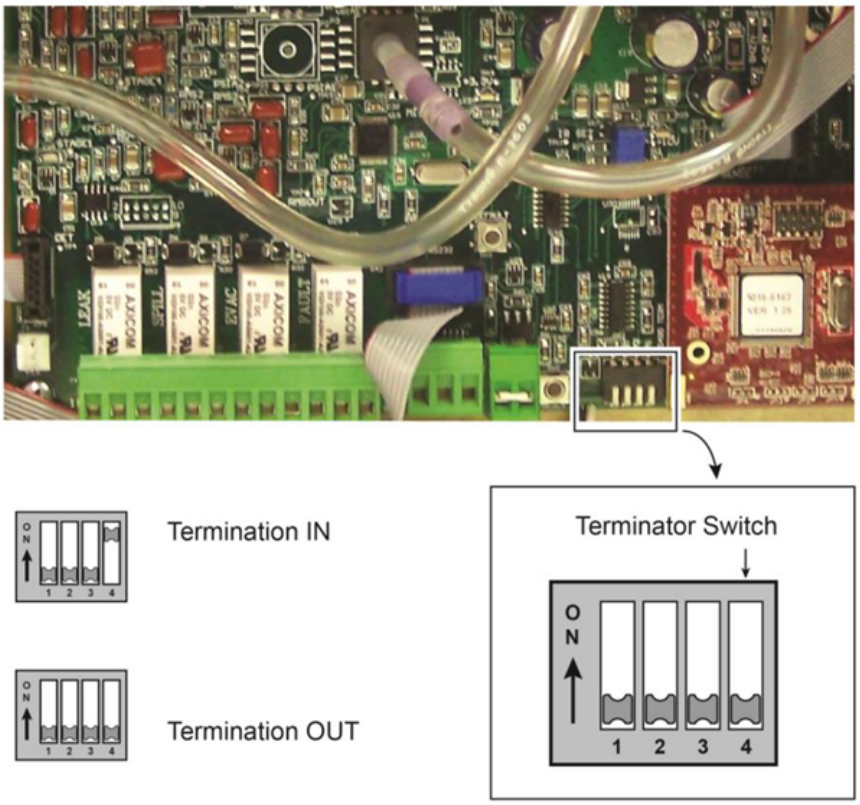

Figure 10 Termination Switches

3.5.5 Personal Computer

The MZ may be connected to a personal computer using the RS-232 interface on the left side of the enclosure. Software will be provided upon request or as a download from the Bacharach website at https://www.mybacharach.com/product-support/manuals-downloads/.

NOTE: Refer to 3.8 PC Software for details.

3.6 Terminating Multiple Monitors

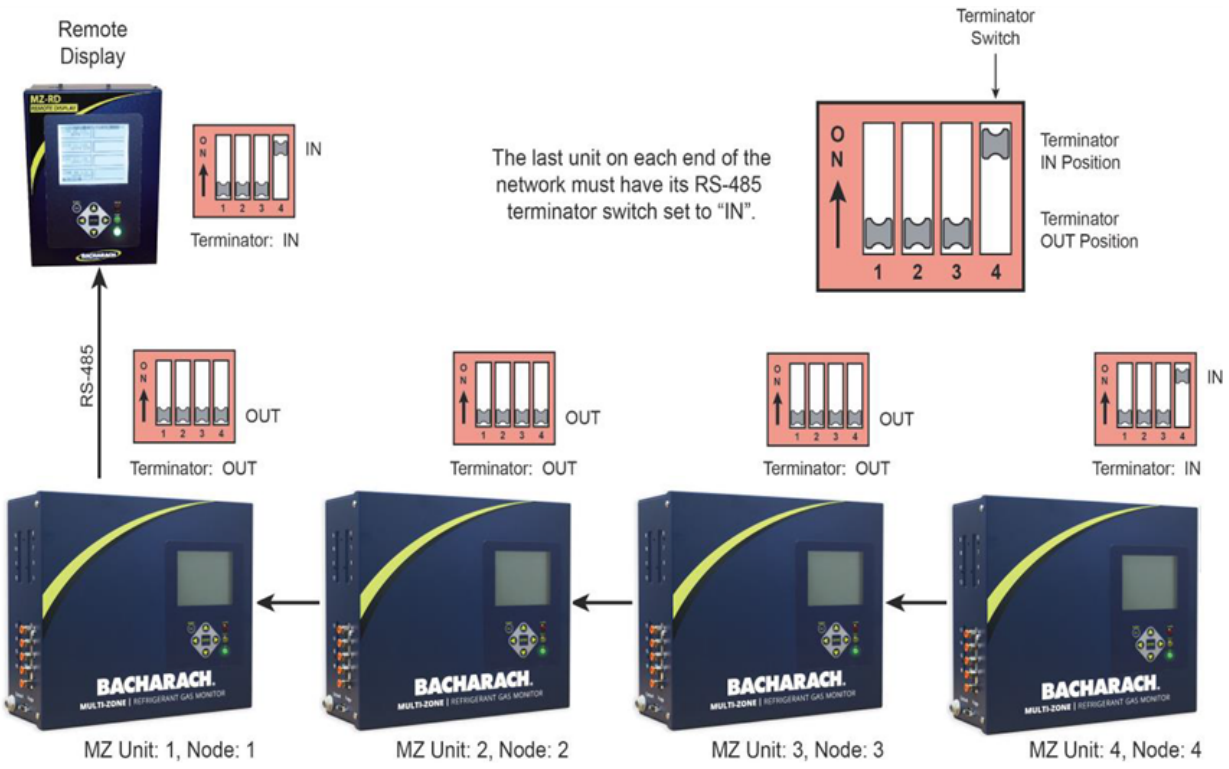

Figure 11 Termination Settings for a Network of Multiple Monitors and a Remote Display

NOTICE

- For multiple MZs with Remote Display, the last MZ or RD on either end of the network must have its terminator in the "IN" position, and all other units must have their terminators in the "OUT" position.
- For multiple MZs with Remote Display, the total length of the RS-485 cable cannot exceed 4500 feet (1372 m). (Use instrument cable 20 gauge multi-strand shielded and twisted pair – similar or equal to Belden cable #8762.)

3.7 Connecting to a Building Management System

The MZ monitor may be connected to a Building Management System via the RS-485 connector. The node address on each MZ monitor may be set from 1 to 15 in order to identify itself to the Building Management System.

NOTE: Building Management Systems set to a 0 or 1 address both respond to messages from the RD as address 1, therefore you should not have a unit set to 0 and another set to 1 on the same network.

If the MZ network is connected directly to a Building Management System it may not be connected to the RD. However, the RD has two communications ports, an "upstream" port (labeled BMS) and a "downstream" port (labeled TO MONITORS). A BMS node may be connected to the upstream RD port while the downstream RD port talks to the MZ monitors. In this case, the BMS is talking "through" the RD to the MZ monitors, but not physically on the MZ/RD network.

NOTE: User must have two (2) dedicated ports to successfully complete the required setup.

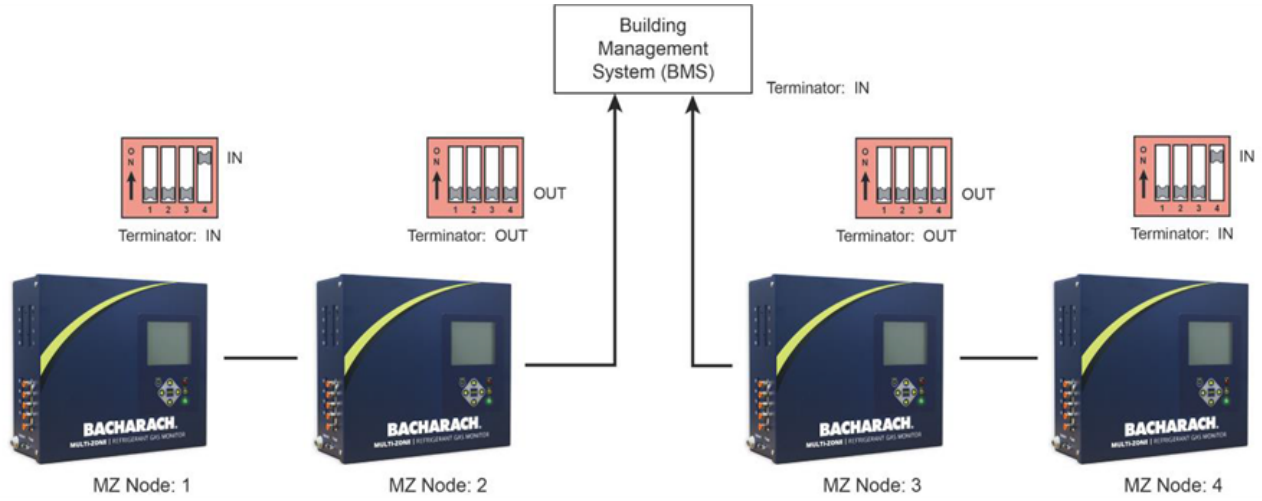

Figure 12 Termination Settings for Multiple Monitors Connected to a BMS (Two Trunks)

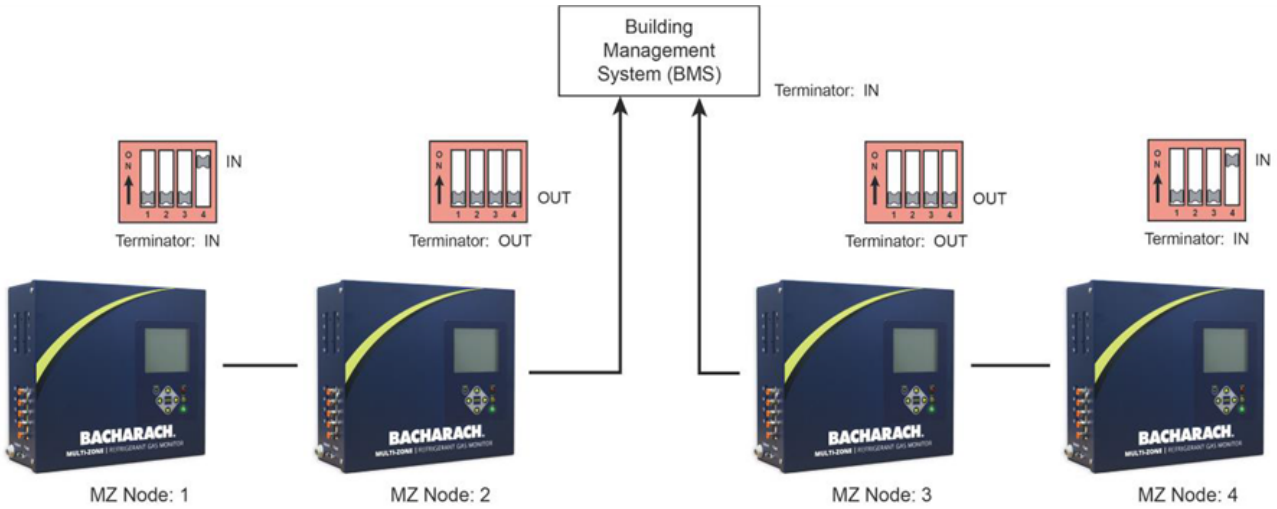

Figure 13 Termination Settings for Multiple Monitors Connected to a BMS (Daisy Chain)

3.8 PC Software

3.8.1 Operation

NOTICE

- The MZ is compatible with HGM300 PC software version 1.52 and higher. However, calibration data can only be edited on the front panel of the MZ, not through the PC software or RDM units.
- The PC software is not compatible with 64-bit (or newer) computers.
- The PC software uses COM1 by default. Therefore, the interface cable should be connected to the port configured as COM1 on the PC. Also, no other software drivers or devices in the computer may control COM1 when the MZ software is in use. Alternatively, COM2 (for example) may be used by adding a space and the number 2 to the command line as follows:
  - C:\pc2HGM.exe 2
- When using a USB to serial converter, be sure it has been mapped to COM1 or COM2.
- The connection is made through a standard “straight through” serial port connection. A three-wire connection is used (RXD, TXD, and GND). No hardware flow control is used. The MZ software automatically configures COM1 to match the MZ RS-232 communications parameters.
- Occasionally, the laptop connection will not connect properly and only two beeps are heard and the program times out. To resolve this, disconnect the RS-232 cable and cycle power on the MZ and the laptop. After both are operational, connect the RS-232 cable and start the software program.

1. Apply power to MZ monitor and allow it to warm up. Note that on CO_2 models, a “Clearing Purge Line” message is displayed for approximately 2.5 minutes before warm up begins.
2. Connect RS-232 interface cable to the PC and RS-232 port on the MZ monitor.
3. Insert software disk into the PC.
4. Open the MZ software using Windows Explorer.
5. Upon start up, the program will immediately attempt to download data from the MZ, as indicated by several beeps.
   a. Navigate using your PC keyboard:
      - Use the up, down, left, and right arrow keys to navigate through the screen options.
      - Use the Enter key to select options.
      - Use the Esc key to go back one step.
6. Go to EDIT. From the EDIT Menu, select SYSTEM. The monitors’ LOCATION becomes highlighted. Press Enter to move to the TAG area. Use the Backspace key to remove the existing tag. Enter a new tag. Press Enter to return to LOCATION. Select the next item to be addressed. Note that you cannot change the “SN” or “FIRMWARE” items. Press the Esc key to return to the menu bar.
7. Go to EDIT. From the EDIT Menu, select ZONES. Select a specific zone to identify and set parameters. When REFRIGERANT is selected (Halogen Monitor), scroll through the gas library to locate and select the gas type for that zone.
8. Setting the Alarms: Select EVAC LEVEL. Use the Backspace key to clear previous setting. Type in the new PPM level. Use the same method to set the spill level and leak level.
9. To close or bypass a zone: Set the DISTANCE to 0 feet.

NOTICE

When a modified parameter (zone, system, or calibration) is sent to the MZ monitor, please wait for the computer software to indicate that the download is complete before continuing with any further edits.

3.8.2 Saving and Sending Programs

- When saving to your computer, the program will automatically add “.cfg” to the filename you have entered.
- To send a saved program to the MZ, open the program and connect the PC to the MZ. From the monitor, select SEND SETUP and press Enter. The saved program will be sent to the MZ.

3.8.3 Trend Data

NOTICE

Creating a trend data file must be done while connected to the MZ.

From the computer, select GET TREND DATA. Select the zone that you want to trend and press Enter. The trend data will appear in a list format. Press Enter again to access the file name screen. Type the file name in for that particular zone. Press Enter. The file will be saved as a text file that can be converted to an Excel file or printed as is.

NOTICE

The TREND file must be saved zone by zone, with a filename per zone.

3.8.4 Converting the TREND Text File to a Microsoft Excel File

Open Excel and the desired file. Select “Delimited” format and “Space” as the delimiter. Select “General” as the column data format. The text file will display as an Excel file. When saving, change the file name extension to “.xls”. Comments or notes may be added to this file as needed and saved.

3.8.5 Saving and Printing Screens and Logs

Open the software while connected to the MZ. After the software receives the program, open the desired screen (e.g., software screen, alarm log, fault log, diagnostic screen, etc.). Use the Alt and Print Screen key combination on the PC keyboard to capture the image and paste it into a Word document. Save and print. This is the last thing that needs to be done.

3.8.6 USB Type Laptops

Some laptops have USB ports and no RS-232 9-pin ports. A USB-to-serial converter or PCMCIA-to-serial converter will be required if a PCMCIA slot is available. You will be required to purchase a PCMCIA card that provides an RS-232 output. This is necessary for Windows Vista and higher versions. We recommend the PCMCIA card manufactured by:

SEALEVEL SYSTEMS, INC.

155 TECHNOLOGY PLACE

P. O. BOX 830 LIBERTY, SC 29657

PHONE: 864-843-4343

www.sealevel.com

Reference part numbers 2105R USB-to-RS232 or PC-SIO-232 PCMCIA card. A “straight through” RS-232 cable and a DB25-to-DB9 adapter will be required to connect the laptop to the HGM-MZ.

3.9 Optional Current Loop Interfaces

NOTICE

The two-output, current loop interface is an option that MUST be ordered separately.

3.9.1 Optional 4-20 mA DC Outputs

Upon installation of the optional 4–20 mA DC Interface Board (P/N 3015-5152), the MZ has the capability of providing dual 4-20 mA DC scrolling current loop outputs for connection to external monitoring devices (e.g., a local loop-powered display or a building management system [BMS]).

NOTICE

- Loop outputs are powered internally. Do not use an external power supply as this can damage the loop card.
- Optional remote loop-powered displays are available to view the 4-20 mA outputs.

The interfaces are set up as follows:

- Loop 1 indicates zone area
- Loop 2 indicates PPM.

The 4-20 mA outputs are scaled to correspond to individual zone numbers and PPM concentrations. Scaling for the 16 (maximum) zone numbers is fixed (see table below). The default scaling for the PPM concentrations provides a 0-1000 PPM range for the 4-20 mA output, although it can be adjusted through the LOOP2 FACTOR option in the SYSTEM SETUP screen. Refer to the tables below.

Loop 1 = Zone		Loop 2 = PPM (Default: 0.016 mA DC = 1 PPM)	
Output	**Zone**	**Output**	**PPM (Default)**
4 mA DC	n/a	4 mA DC	0 PPM
5 mA DC	1	5 mA DC	63 PPM
6 mA DC	2	6 mA DC	125 PPM
7 mA DC	3	7 mA DC	188 PPM
8 mA DC	4	8 mA DC	250 PPM
9 mA DC	5	9 mA DC	313 PPM
10 mA DC	6	10 mA DC	375 PPM
11 mA DC	7	11 mA DC	438 PPM
12 mA DC	8	12 mA DC	500 PPM
13 mA DC	9	13 mA DC	563 PPM
14 mA DC	10	14 mA DC	625 PPM
15 mA DC	11	15 mA DC	688 PPM
16 mA DC	12	16 mA DC	750 PPM
17 mA DC	13	17 mA DC	813 PPM
18 mA DC	14	18 mA DC	875 PPM
19 mA DC	15	19 mA DC	937 PPM
20 mA DC	16	20 mA DC	1000 PPM

3.9.2 4-20 mA DC Connections

External devices are connected to the MZ monitor using a shielded dual twisted pair cable. Use any of the remaining service knockouts to gain access to the interior of the monitor. Locate the dual 4–20 mA DC output connector (see below) and remove it from the circuit board. Secure the wire leads to the connector orienting them as shown in the diagram below. Check to make sure the polarity matches the wiring at the external device. When you are through securing the connections, carefully plug the connector back onto the circuit board.

NOTICE

- The ground connections of the 4-20 mA DC output connector are common.
- The 4-20 mA DC output connectors are SIGNAL OUT ONLY. DO NOT APPLY POWER.
- It is highly recommended that a current loop isolator is used when connecting to the 4-20 outputs. Bacharach recommends the “Dataforth DSCL 21 Loop powered isolator DIN mount.” More detailed information can be found at www.dataforth.com.
- When one or both current loop outputs are not used, install a jumper wire between the ground and the unused loop terminal(s) to prevent the system from generating a current loop fault.

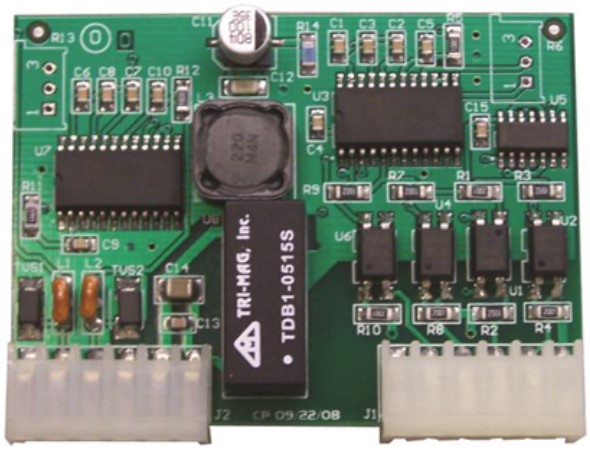

Figure 14 Optional Dual 4-20 mA DC Output Board for the Multi-Zone

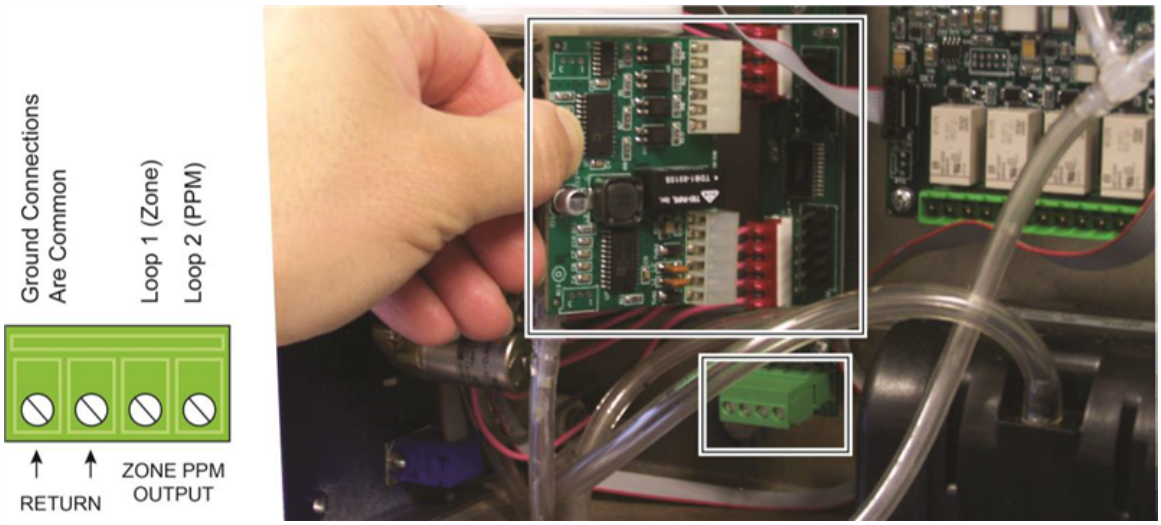

Figure 15 Optional Dual 4-20 mA DC Outboard Power and Connector

3.10 Connecting External Alarms

3.10.1 Overview

The MZ monitor includes four SPDT relays whose contacts are rated 2 A at 250 VAC (inductive) and 5 A at 250 VAC (resistive). These relays are used for the connection of external alarm devices that are activated when the relay is energized. The relays are factory assigned to energize under the following conditions:

Relay #1	Leak	Alarm Point 100 ppm
Relay #2	Spill	Alarm Point 300 ppm
Relay #3	Evacuate	Alarm Point 500 ppm
Relay #4	Fault	System Fault Event

3.10.2 Connection

Use the conduit or any of the remaining service knockouts to gain cable access to the interior of the monitor. Locate the relay connector (see Figure 2-14 on page 13) and remove it from the circuit board. Secure the leads to the connector orienting them as shown in the diagram below. When you are through securing the connections, carefully plug the connector back onto the circuit board.

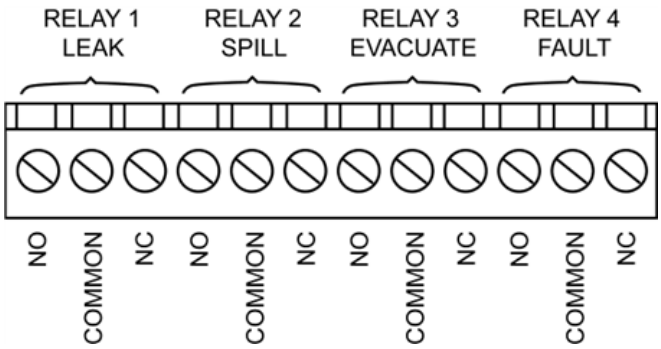

Figure 16 MZ Monitor Relay Connector

Each relay may be connected as normally open (NO), or normally closed (NC). The relay contacts are rated 2 A at 250 VAC (inductive) and 5 A at 250 VAC (resistive).

Power for the alarm devices connected to the relay contacts may be supplied by an external 24 VDC power source or the monitor's AC input terminals. In the first wiring diagram, power to this device is being tapped off the monitor's AC input. In the second wiring diagram, power is supplied from an external power source.

Jumper the "Live/Positive" line of an external power source (DC devices) or the monitor's AC input (AC devices) to the "Common" terminal on the relay connector.

Connect the "Live/Positive" end of the strobe or horn to the "NO" terminal of whichever level of alarm is appropriate for the application.

For protection, install an in-line fuse of the appropriate size and design for the external alarm device being used.

The other end of the strobe or horn is connected to the “Neutral/Negative” leg of the external power source (DC devices) or monitor’s AC input (AC devices).

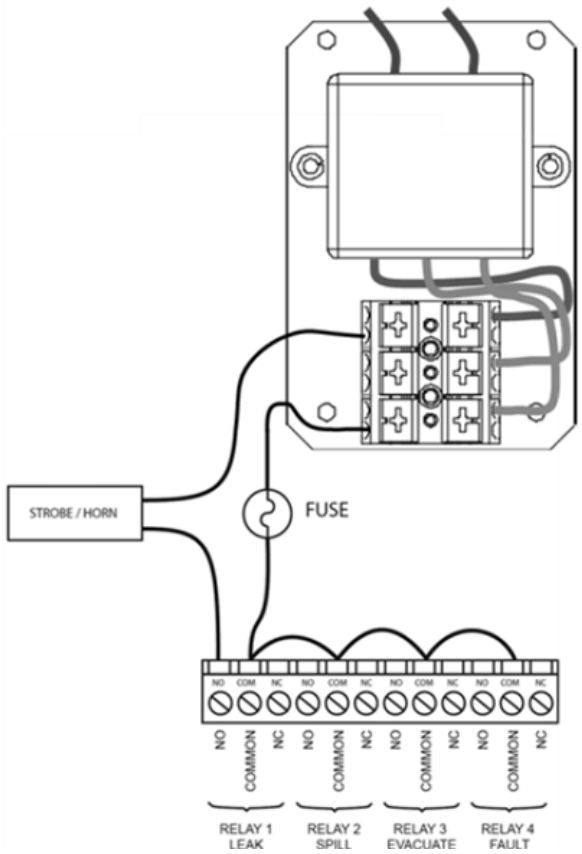

Figure 17 Typical AC External Alarm Relay 1 Wiring

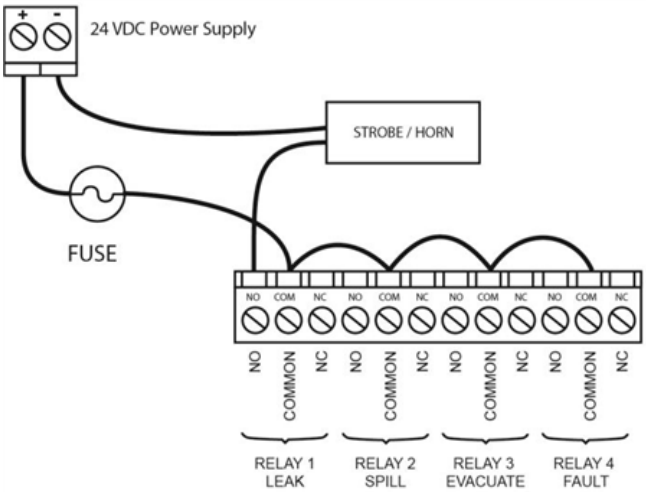

Figure 18 Typical DC External Alarm Relay 1 Wiring

4 Setup Programming

4.1 Initial Power Up

When the MZ monitor is powered up, all front panel LEDs will illuminate and a splash screen will appear, displaying the monitor's firmware version level. Note that on CO_2 models, a "Clearing Purge Line" message is displayed for approximately 2.5 minutes before warm up begins. After a moment, the Warm Up screen will be displayed and the green MONITOR ON light will blink.

After a 15-minute warm up cycle, the MONITOR ON light will glow steadily and the Data Display screen will be displayed. (See Appendix 3 System Menu Map for an overview map of the screens in the system.)

4.2 Data Display Screen

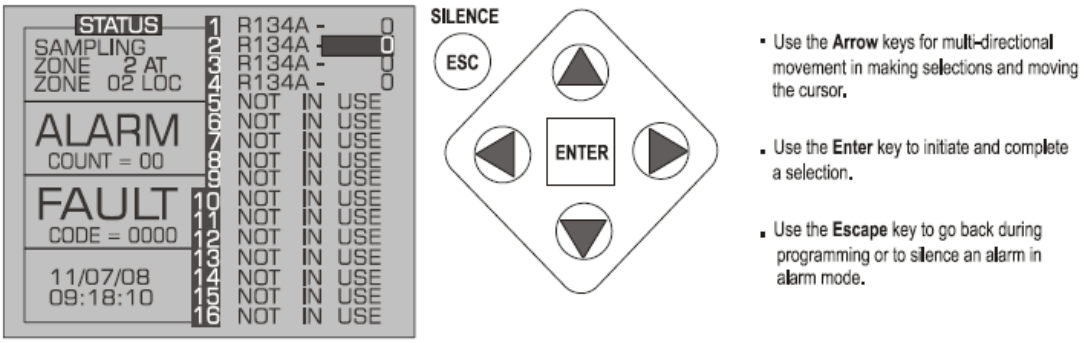

Figure 19 Data Display Screen and Front Panel Keypad

4.3 Navigating to the 1st Setup Screen

From the Data Display Screen, press the UP or DOWN arrow key. SETUP will be highlighted in the first box. Press ENTER to select this option and display the Setup screen (see below).

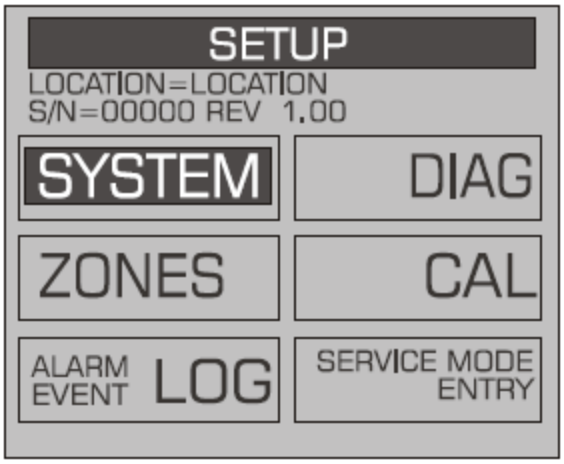

Figure 20 System Setup Screen #1

4.4 Navigating to the 2nd Setup Screen

From System Setup Screen #1, select the SYSTEM option to go to System Setup Screen #2. Select the ESC key to return to the System Setup Screen #1.

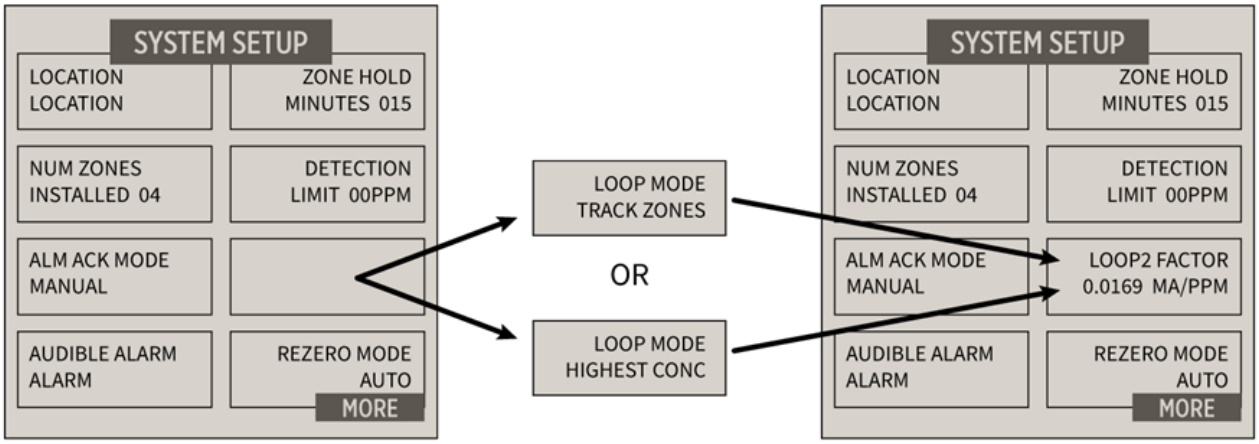

Figure 21 HGM System Setup Screen #2

4.4.1 Location

This is the name you assign to the MZ monitor to identify its location. It may have up to 12 alphanumeric characters.

1. Press the ENTER key to adjust the setting.
2. Use the LEFT/RIGHT cursor keys to move across the entry field and the UP/DOWN cursor keys to modify the individual characters.
3. Press ENTER to accept the new entry or ESC to revert to the previous setting.

4.4.2 Number of Zones Installed

CAUTION!

Deactivating zones will result in no gas detection for that zone. If there is a gas concentration in the area of a zone it will not be detected by an inactive zone.

Failure to follow this caution can result in minor or moderate injury.

NOTICE

Do not change the number of zones to deactivate unused zones. Changing the number of installed zones is only necessary when manifold blocks are added or removed. Go to the individual zone that you wish to disable and set its distance to zero.

1. Press the ENTER key to adjust the number.
2. Use the UP/DOWN cursor keys to modify the number (must be 4, 8, 12, or 16).
3. Press ENTER to accept the new number or ESC to revert to the previous setting.

4.4.3 Alarm Acknowledge Mode

This function programs the relays in the unit for latching or non-latching operation.

1. Press the ENTER key to adjust the setting.
2. Use the UP/DOWN cursor keys to toggle between settings:

AUTO	Non-latching (Alarm relay will automatically de-energize when the gas level drops below its alarm point.)
MANUAL	Latching (Alarm relay remains energized, and will not release until the alarm condition has been manually acknowledged. Refer to 5.4.4 Acknowledging Alarms.)

3. Press ENTER to accept the new entry or ESC to revert to the previous setting.

4.4.4 Audible Alarm

This parameter selects the function of the MZ monitors internal audible alarm device.

1. Press the ENTER key to adjust the setting.
2. Use the UP/DOWN cursor keys to select unused, monitor on, evacuate, spill, leak, fault, or alarm.
3. Press ENTER to accept the new entry or ESC to revert to the previous setting.

NOTE: In “Monitor On” mode, the unit will only give audible alarms on a critical fault that stops the unit from monitoring.

4.4.5 Zone Hold

Sets the length of time a zone will be monitored when the zone hold feature is activated. The default is 15 minutes. The range is 1 to 999 minutes.

1. Press the ENTER key to adjust this setting.
2. Use the LEFT/RIGHT cursor keys to move across the entry field and the UP/DOWN cursor keys to modify the individual numbers.
3. Press ENTER to accept the new entry or ESC to revert to the previous setting.

4.4.6 Detection Limit

This is essentially a squelch setting that instructs the instrument to interpret PPM readings below the designated level as 0. The range is 1 to 99 PPM.

1. Press the ENTER key to adjust the setting.
2. Use the UP/DOWN cursor keys to modify the setting.
3. Press ENTER to accept the new entry or ESC to revert to the previous setting.

4.4.7 Loop Mode

This sets the loop mode of the two optional 4-20 mA outputs. Options are:

- track zones mode (default)
- highest PPM concentration mode.

NOTE: Both LOOP MODE (for selecting track zones or highest PPM mode) as well as the LOOP2 FACTOR (for scaling the PPM output) are configured from the SETUP menu. Configure one, then press ENTER to access the other.

NOTE: While loop mode selection is displayed for edit, the loops will read full-scale 20mA as a means to verify operation, wiring and span.

In *track zones mode* the MZ adjusts the ZONE and PPM outputs to correspond to the latest sampled zone number and its corresponding PPM concentration, respectively. For example, if the MZ samples zone #9 at 63 PPM, the ZONE and PPM

outputs would read 13 mA (corresponds to zone #9) and 5 mA (corresponds to 63 PPM), respectively, until the next zone is sampled. This continues in a cyclic fashion through each zone. Note that this example assumes LOOP2 Factor was left at its default value (0.016). This can be adjusted through the LOOP2 FACTOR option in the SYSTEM SETUP screen.

In *highest concentration (PPM) mode* the MZ adjusts the two current outputs to correspond to the zone number that has the highest PPM concentration and the corresponding value of that concentration, respectively. Unlike track zones mode, this mode will adjust the two outputs to correspond to whichever zone has the highest PPM concentration. For example, if zone #9 is sampled at 125 PPM, the two 4-20 mA outputs will read 13 mA and 6 mA, respectively, as long as it continues to sample at 125 PPM or until a different zone samples a concentration greater than 125 PPM.

4.4.8 Loop2 Factor

This sets the PPM scale factor for current loop number 2. After setting the loop mode, the menu box changes to a lower-level menu that allows you to set the Loop2 Factor. To calculate the current output, multiply the scale factor by the PPM and add 4. For example, at the default scale factor of 0.016, a measurement of 100 ppm would generate a current output of 5.6 mA DC. The current output cannot exceed the 20 mA DC capacity of the interface.

1. Press the ENTER key to adjust the setting.
2. Use the LEFT/RIGHT cursor keys to move across the entry field and the UP/DOWN cursor keys to modify the individual characters.
3. Press ENTER to accept the new entry or ESC to revert to the previous setting.

NOTE: Both LOOP MODE (for selecting track zones or highest PPM mode) as well as the LOOP2 FACTOR (for scaling the PPM output) are configured from the SETUP menu. Configure one, then press ENTER to access the other.

NOTE: While Loop2 Factor is displayed for edit the loops will indicate Zone 1 and Zero PPM (5mA, 4mA) for testing and verification purposes.

4.4.9 Re-Zero Mode

This parameter defines the frequency at which the instrument re-zeros the optical sensor.

1. Press the ENTER key to adjust the setting.
2. Use the UP/DOWN cursor keys to toggle between settings.

AUTO	Sets the instrument to re-zero every 10 minutes.
ZONE CHANGE	Sets the instrument to re-zero at each zone change. This is the most accurate setting, but increases the time interval between measurement cycles.

3. Press ENTER to accept the new entry or ESC to revert to the previous setting.

4.5 Navigating to the 3rd Setup Screen

4.5.1 Overview

From System Setup Screen #2, select the MORE option to go to System Setup Screen #3. Select the BACK option to return to System Setup Screen #2.

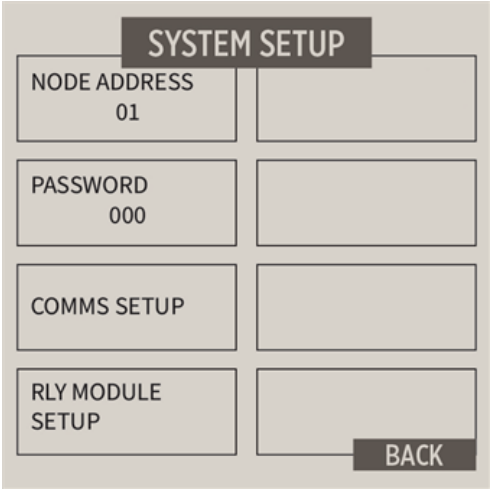

Figure 22 System Setup Screen #3

4.5.2 Node Address

Each monitor on the network must has a distinct node address. The node address may be set from 1 to 64.

1. Press the ENTER key to adjust the setting.
2. Use the LEFT/RIGHT cursor keys to move across the entry field and the UP/DOWN cursor keys to modify the individual numbers.
3. Press ENTER to accept the new entry or ESC to revert to the previous setting.

4.5.3 Password

This field is used to define a system password. The default setting is 000, which provides no password protection.

1. Press the ENTER key to adjust the setting.
2. Use the LEFT/RIGHT cursor keys to move across the entry field and the UP/DOWN cursor keys to modify the individual alphanumeric characters.
3. Press ENTER to accept the new entry or ESC to revert to the previous setting.

NOTE: After entering the password (including the 1st time it is set), the MZ begins a 30-minute “inactivity” timer that is reset every time a key is pressed. When the timer reaches zero, password access is enabled. To enable password protection sooner, cycle power on the Multi-Zone. When password protected, a password entry is required in order to view screens other than the SYSTEM or ZONE VIEW screen.

4.5.4 Comms Setup

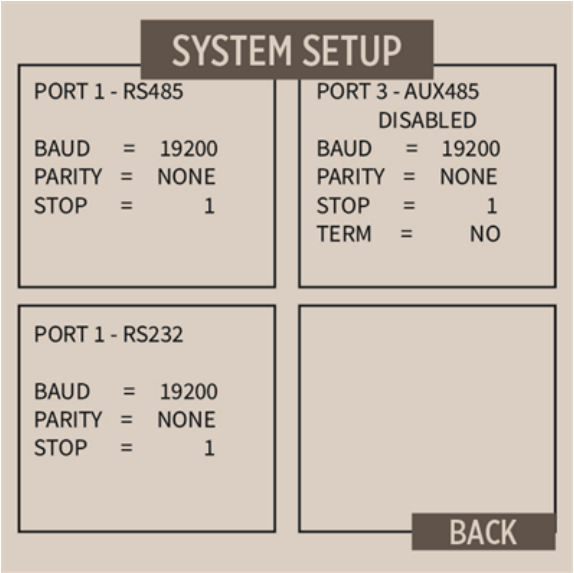

Figure 23 Comms Setup Screen

This screen allows users to configure the communications settings for the RS-485 (standard), RS-232 (standard), and the AUX485 [when supplied with theLON socket adapter Kit (P/N 3015-6027)] ports.

1. Press the ENTER key to adjust the setting.
2. Use the LEFT/RIGHT cursor keys to move across the entry field and the UP/DOWN cursor keys to modify the individual alphanumeric characters.
3. Press ENTER to accept the new entry or ESC to revert to the previous setting.

4.5.5 Relay Module Setup

This field is used to configure the MZ Relay Module, P/N 3015-6265, when used with the MZ Gas Monitor. Please refer to the MZ Relay Module User Manual, P/N 3015-6259, to configure the RLY MODULE SETUP screens.

4.6 Additional Service Features

The Service Mode option is located on the System Setup Screen in the bottom right corner. When activated, the Service Mode will disable the MZ unit for a specified length of time. The default is 15 minutes. This time interval can be changed as described in the Service Timeout section below.

⚠ WARNING!

Note that while in the Service Mode no measurements are made, nor are any alarms activated.
Failure to follow this warning can result in serious personal injury or death.

Access the service mode options from the initial Data Display Screen. Press the SERVICE MODE ENTRY option twice within 3 seconds. To exit the Service Mode, again press the SERVICE MODE ENTRY option twice within 3 seconds.

Several features can be viewed on the System Setup Screen #3 when the monitor is placed in service mode. While in service mode, the user can identify the model number, set digipot values and sensor temperature, and acquire the temperature coefficient.

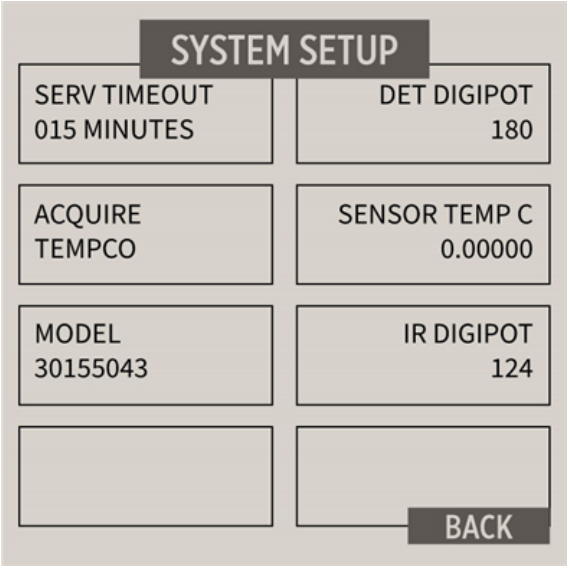

Figure 24 System Setup Screen #3 (Service Mode)

4.6.1 Service Timeout

Displayed in Service Mode. Sets the length of time the Service Mode is in effect. Changes monitor to Purge Mode and suppresses any alarms for up to 300 minutes (5 hrs) to allow for servicing the unit. The default Service Timeout is 15 minutes.

1. Press the ENTER key to adjust the setting.
2. Use the LEFT/RIGHT cursor keys to move across the entry field and the UP/DOWN cursor keys to modify the individual numbers.
3. Press ENTER to accept the new entry or ESC to revert to the previous setting.

4.6.2 DET DIGIPOT

The DIGIPOT function allows *manual* and a more precise adjustment of the digital potentiometer, which controls the voltage of the IR Detector. The DIGIPOT is auto tuned at every power up.

1. Press the ENTER key to adjust the setting. Once the option is selected the screen will also display the voltage.
2. Use the UP/DOWN cursor key to modify the DIGIPOT value.

4.6.3 Sensor Temperature Coefficient (For Factory Use Only)

This field is typically for factory use only. A customer *may* need to enter a temperature coefficient if the IR bench is replaced and a new temperature coefficient is supplied with the replacement bench. Note, however, changing this setting will void the calibration.

4.6.4 Acquiring Temperature Coefficient (For Factory Use Only)

This field is for factory use only. Changing this setting will void the calibration.

4.6.5 IR DIGIPOT

This option indicates the electrical parameters of the infrared emitter.

4.7 Establishing the CO_2 Sensor Baseline

WARNING!

Before powering up the instrument, ensure that the purge line is connected to the instrument and that the purge line is terminated in fresh air. Otherwise the CO_2 sensor baseline can be compromised and CO_2 readings from the instrument will be affected.

When the instrument sets the CO_2 baseline, it uses a default ambient CO_2 level of 386 ppm. If you know that the ambient CO_2 level in fresh air at your location is different, refer to Section 5.7.5 CO2 Atmospheric Concentration.

Failure to follow these settings can result in erroneous concentration readings.

Failure to follow this warning can result in serious personal injury or death.

At power up, an automatic zeroing sequence establishes the CO_2 sensor baseline. At that time, the MZ assumes the default ambient CO_2 level of 386 ppm. However, if:

- the purge line wasn't connected to the instrument, or
- the purge line was not terminated in fresh air,

then the sensor baseline may be compromised. If you suspect that the baseline was compromised, then you can re-establish the proper CO_2 sensor baseline by ensuring the purge line is properly installed and following the procedure below.

1. Restart the monitor by either (a) cycling the power, or (b) pressing the CPU reset switch on the main printed circuit board (see Figure 26).

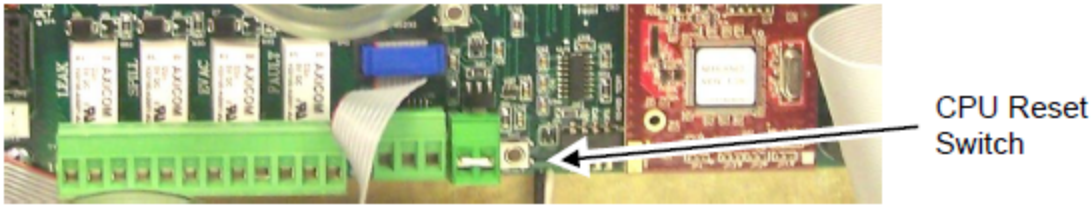

Figure 25 Location of CPU Reset Button

WARNING!

- Only authorized service personnel may work inside the MZ when under power.
- If using the CPU reset switch to restart the instrument, extreme care must be exercised when accessing the interior of the monitor. This includes touching a non-painted area of the MZ chassis to provide proper grounding prior to touching the CPU reset switch or any other internal components. Failure to touch a grounding area can allow static electricity on your clothing or body to damage the monitor. Such damage is not covered under warranty.

Failure to follow these warnings can result in serious personal injury or death.

2. After the restart and the warm-up have completed, the instrument is ready for use.

5 General Operation

5.1 Functional Overview

Normally each MZ monitor will sequentially perform measurements on its active zones without user input. The total time it takes a MZ monitor to complete a measurement cycle is directly proportional to the number of active zones and the physical length of the air lines. Monitors linked together on a network operate independently of each other and consequently complete their respective measurement cycles at different rates.

The Remote Display operates by polling the network approximately once every 12 seconds to determine the current status of the MZ monitors. If more than one MZ is connected to the network, it will sequentially poll each monitor for its status. As a practical matter this simply means that the more complicated the network, the longer it will take the RD to update the status information for all zones.

5.2 The Zone Setup Screen

From System Setup Screen #2, scroll down to select the ZONES option.

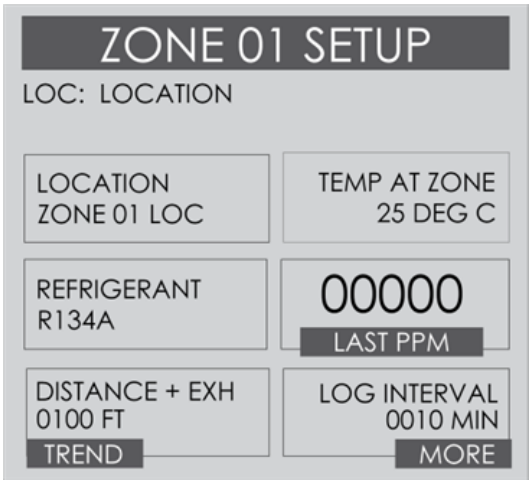

Figure 26 Zone Setup Screen #1

5.2.1 Gas/Refrigerant Type

This parameter defines the kind of gas the MZ is detecting.

1. Press the ENTER key to adjust the setting;
2. Use the LEFT/RIGHT cursor keys to select the type of gas for the device to detect. (Options differ per model).
3. Press ENTER to accept the new entry or ESC to revert to the previous setting.

5.2.2 Distance + EXH

This parameter defines the combined length of the sample tubing plus any tubing on the exhaust port. Total length cannot exceed 1200 ft. An unused Zone can be disabled by setting the distance to zero. This will cause the Zone to be skipped in the measurement cycle.

1. Press the ENTER key to adjust the setting.
2. Use the LEFT/RIGHT cursor keys to move across the entry field and the UP/DOWN cursor keys to modify the individual characters.
3. Press ENTER to accept the new entry or ESC to revert to the previous setting.

5.2.3 Temp @ Zone

This parameter is used to set the expected temperature of the air at the zone being sampled. The value is used to calculate the STP PPM value shown in the diagnostic screen only.

1. Press the ENTER key to adjust the setting.

2. Use the LEFT/RIGHT cursor keys to move across the entry field and the UP/DOWN cursor keys to modify the individual characters.
3. Press ENTER to accept the new entry or ESC to revert to the previous setting.

5.2.4 Current Detection Reading

This reading displays the current PPM level of the selected gas.

5.2.5 Log Interval

The MZ retains a data log of 100 measurements for each zone. The log interval is the number of minutes from 1 to 1440 between each log point. This parameter can be changed from Zone Setup Screen #1.

The default setting for this parameter is 10 minutes. If the log interval time is set to 0, then a measurement is recorded in the trend log after every measurement cycle. Therefore, after the trend log is filled, it will contain the last 100 measurement points for a zone. If you want the data logged less frequently, increase this value. It is important to remember that cycle time is dependent on many factors, including the number of zones monitored, input line length, and the run zeroing mode selected. Before changing this value it may be useful to first review the log data using the Trend Screen to determine the nominal cycle time.

5.3 Navigating to the 2nd Zone Setup Screen

Select the MORE option at the bottom right side of the first Zone Setup screen to continue to the next screen containing more options. This screen displays the peak PPM value in the upper left side of the screen.

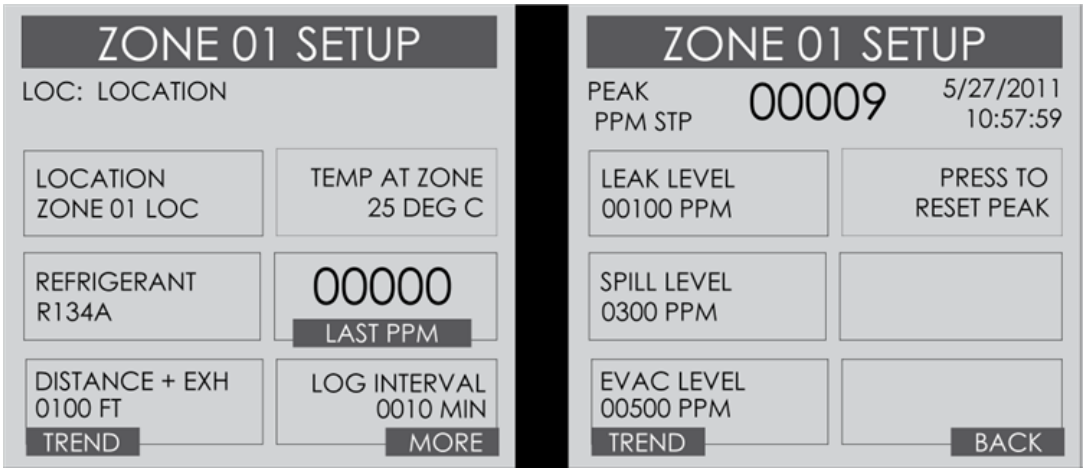

Figure 27 Navigating from the First to the Second Zone Screen

5.3.1 Leak Level

This is the concentration level in PPM that will activate a leak alarm condition.

1. Press the ENTER key to adjust the value.
2. Use the UP/DOWN cursor keys to modify the setting.
3. Press ENTER to accept the new entry or ESC to revert to the previous setting.

NOTICE

The leak level value must be less than the spill level.

5.3.2 Spill Level

This is the concentration level in PPM that will activate a spill alarm condition.

1. Press the ENTER key to adjust the value.
2. Use the UP/DOWN cursor keys to modify the setting.
3. Press ENTER to accept the new entry or ESC to revert to the previous setting.

NOTICE

The spill level value must be less than the evacuation level and greater than the leak level.

5.3.3 Evacuation Level

This is the concentration level in PPM that will activate an evacuate alarm condition.

1. Press the ENTER key to adjust the value.
2. Use the UP/DOWN cursor keys to modify the setting.
3. Press ENTER to accept the new entry or ESC to revert to the previous setting.

NOTICE

The evacuation level value must be greater than the spill level.

5.3.4 Re-Setting the Peak PPM Value

Pressing this key resets the current peak PPM level stored in memory and displays it at the top of the screen.

5.4 Alarms

5.4.1 Functional Overview

If the PPM level for any zone exceeds its designated spill, leak, or evacuate thresholds, an alarm condition will be created. Once the MZ monitor completes a measurement cycle in the affected zone the alarm condition will be indicated. At that time the red ALARM LED on the MZ monitor will glow. Additionally, an external alarm device may activate and an audible alarm may sound if those features have been enabled. The next time the RD polls the affected monitor its red ALARM LED will glow. Additionally, an external alarm device may activate and an audible alarm may sound if those features have been enabled.

5.4.2 Responding to Alarms

An operator can respond to the alarms by accessing the Alarm Summary Screen. Navigate to this screen by selecting ALARM on the first (Data Display) screen.

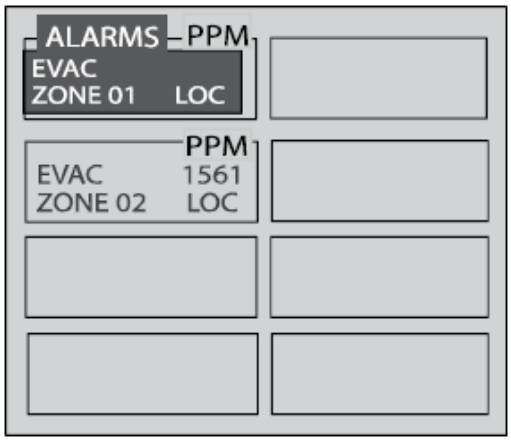

Figure 28 Alarm Summary Screen

The Alarm Summary Screen displays a list of all alarm conditions pending across the network. The screen is divided into 8 boxes, and each box represents a single alarm. If more than 8 alarms are pending, the MORE option will be displayed at the bottom of the screen to permit access to that additional information.

Each box displays the zone number, zone name, and the current PPM reading. A flashing box indicates an alarm that has not been acknowledged. A static box represents an alarm that has been acknowledged, but has not yet been cleared from the system.

5.4.3 Alarm Detail Screen

To further investigate an alarm, press the ENTER key to go to the Alarm Detail Screen.

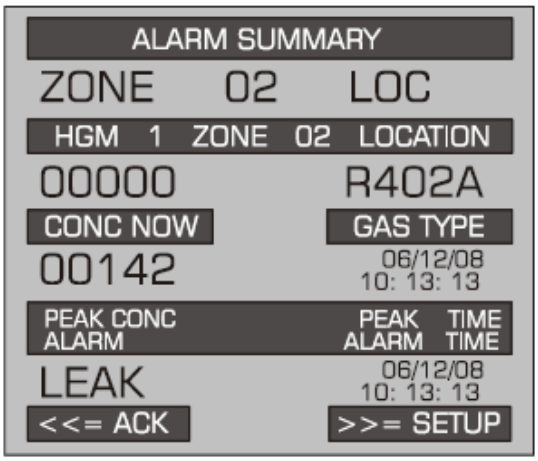

Figure 29 Alarm Detail Screen

The Alarm Detail Screen displays more comprehensive information about the nature of the alarm including:

- Complete location information
- Gas type and current concentration (CONC NOW)
- Peak concentration and peak time
- Type of alarm, alarm time, and date.

This screen provides the following navigation options at the bottom of the display:

ACK	Using the left arrow key, acknowledges the alarm as described in the next section
SETUP	Using the right arrow key, navigate to the Zone Setup Screen #1. This enables review of the zone setup parameters and access to the Trend Screen.

Use the ESC button on the front case to go back to the previous menu.

5.4.4 Acknowledging Alarms

Each pending alarm may require, depending upon selected alarm mode, acknowledgment before the system returns to normal operation (refer to 4.4.3 Alarm Acknowledge Mode). To acknowledge an alarm, navigate to the Alarm Detail Screen and select the ACK option as previously described. You will then be returned to the Alarm Summary Screen and the box associated with that alarm will no longer be blinking, indicating that the alarm has been acknowledged. Repeat this procedure to acknowledge any remaining alarms.

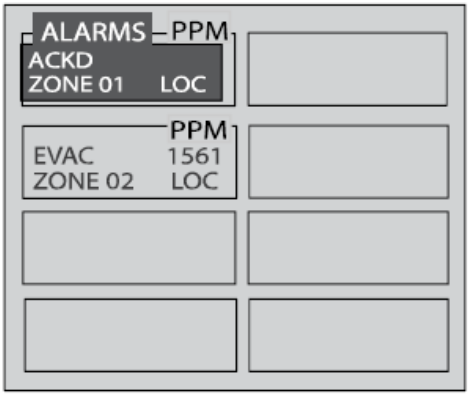

Figure 30 Alarm Summary Screen (Acknowledge Mode)

Once all the alarms associated with a given MZ monitor are acknowledged, its RED LED will turn off and any external alarms connected to the MZ relays will de-activate. All pending alarms across the entire network must be acknowledged before the Remote Display returns to normal operation. Once that occurs, its RED LED will turn off and any associated external alarms connected to the RD relays will de-activate.

Keep in mind that the system will continue to generate new alarms if PPM values above the alarm thresholds are detected.

5.4.5 Silencing an Alarm

When alarms are active, the ESC key functions as a silence key. During an active alarm and with the main screen displayed, press the ESC key. This will generate a prompt to “PRESS ENTER TO CONFIRM SILENCE”. When ENTER is pressed, the LEAK relay will open and the internal audible alarm (if enabled) will turn off. In this way, when the LEAK relay is used to operate strobes and horns, they can be quickly silenced without effecting the SPILL or EVAC, which may be controlling fans or ventilation equipment. This “silence” mode will be indicated by a reverse flashing “S” in the alarm window. “Silence mode” will be automatically canceled if the alarm condition of any zone changes by clearing or elevating to a higher level.

5.4.6 Clearing the Alarm Event Log

A data log of the last 20 alarm events is retained in memory.

- From the Data Display Screen, press the UP or DOWN arrow key. SETUP will be highlighted in the first box.
- Press the DOWN arrow key until Alarm Event Log is highlighted, then press ENTER to select this option and display the Alarm Event Log (see below).

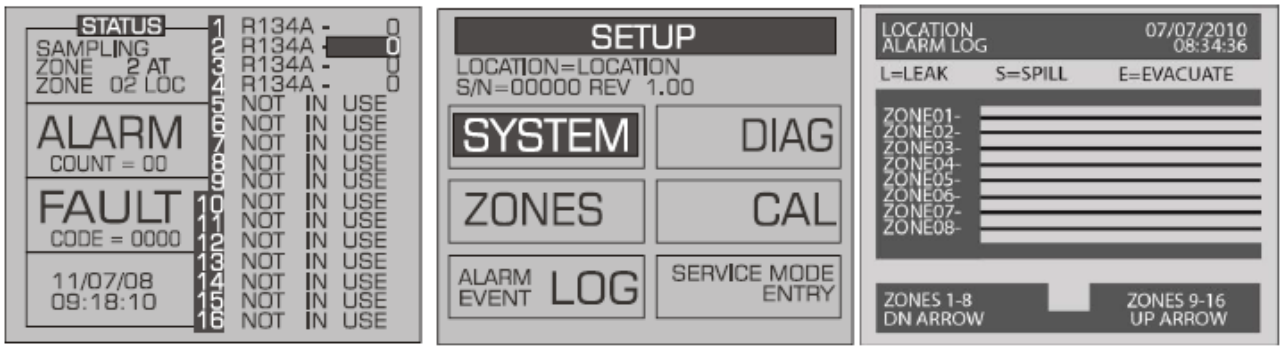

Figure 31 Accessing the Alarm Event Log

This screen lists zones in the left column and displays which alarms were associated with each zone as represented by the vertical cursor bar. As you move the bar horizontally using the LEFT/RIGHT cursor keys, the date and time the alarm condition was detected is displayed in the upper right hand corner of the display window.

NOTICE

The Alarm Event Log can be reset by pressing a combination of the ENTER and RIGHT arrow buttons while viewing the log.

5.5 System Faults

5.5.1 Functional Overview

If a system malfunction occurs, the yellow FAULT LED will glow. Additionally, an external alarm device may activate and an audible alarm may sound if those features have been enabled (see 3.10 Connecting External Alarms and 4.4.4 Audible Alarm

The next time the Remote Display polls the affected monitor its yellow FAULT LED will also glow. Additionally, an external alarm device may activate and an audible alarm may sound if those features have been enabled (see 3.10 Connecting External Alarms and 4.4.4 Audible Alarm

Depending on the nature of the fault, the MZ monitor may or may not continue to operate normally. Under a non-critical fault condition, the MZ will continue to measure and log data, but some peripheral functions may be compromised. Under a critical fault condition, action is required for the MZ monitor to operate normally. The table on the following page lists the various fault conditions and explains what action should be taken to correct the problem. Note that the fault codes are cumulative. For example, a code <4200> is both a <4000> “REZERO VOLT TOL” and <0200> “GAIN SET FAULT” combined, indicating two simultaneous faults.

5.5.2 Navigating to the Fault Screen

Displayed on the initial Data Display Screen is a Fault option. Scroll down with the cursor key and select this option, which will introduce you to the Fault Screen.

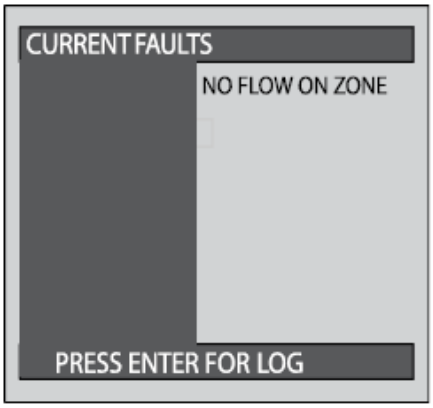

Figure 32 Fault Screen

5.5.3 Critical Faults

Fault	Code	Description / Possible Causes
NO FLOW ON ZONE	<0800>	Go to the Data Display Screen and press the FAULT key. This will display a “NO FLOW” message in each individual zone affected. Check for a blockage in the air sample line or at the line end filter. Once the blockage has been cleared, the MZ monitor will return to normal operation after the zone has been sampled.

NOTICE

This can take several minutes since it is dependent upon how many zones there are and their lengths. The MZ will clear the fault the next time it polls the effected zone and the RD will return to normal operation the next time that it polls the MZ.

NO FLOW ON PURGE	<1000>	Check the purge line for a blockage. Verify that the length of the purge line and exhaust line do not exceed 500 feet in length.
CLIPPING FAULT	<8000>	The detector voltage may be out of tolerance. For information on troubleshooting this type of fault, refer to 6.3 Troubleshooting.
REZERO VOLT TOL	<4000>	The detector output voltage is out of tolerance. For information on troubleshooting this type of fault, refer to 6.3 Troubleshooting.
OVER RANGE DETECTED	<2000>	This indicates that the measured concentration on one or more zones have exceeded the measurement range. For information on troubleshooting this type of fault, refer to 6.3 Troubleshooting.
ZERO FILTER FAULT	<0100>	Indicates contamination in the purge air, or if a charcoal filter is in use, the filter may need to be changed.
GAIN SET FAULT	<0200>	Indicates sensor gain (digipot) is outside acceptable range. For information troubleshooting this type of fault, refer to 6.3 Troubleshooting.
A2D FAULT	<0400>	Analog to digital converter not working.

5.5.4 Non Critical Faults

Fault	Code	Description / Possible Causes
BOX TEMP FAULT	<0001>	Enclosure's internal temperature is outside normal range (or IR sensor has failed). Check the installation to verify that the monitor is not being subjected to extreme temperatures. Verify that the ventilation holes are not obstructed. Refer to the Diagnostic Screen for the ZERO temperature, BNCH temperature and BOX temperature. Call the factory with this information for further instructions.
BENCH TEMP FAULT	<0002>	Optical bench is outside of normal operating range (or sensor has failed). Check the installation to verify that the monitor is not being subjected to extreme temperatures. Check the Diagnostic Screen for the ZERO temperature, BNCH temperature and BOX temperature. Call the factory with this information for further instructions.
PRESSURE SENSOR	<0004>	Manifold pressure is outside normal operating range (or sensor has failed). Check the Diagnostic Screen record ALL data. Call the factory with this information for further instructions.
RS485 FAULT	<0008>	RS-485 Communications Error.
LOOP FAULT	<0010>	This would only be displayed if the dual 4-20 mA DC option was installed and one or both current loops are open. Check the wiring to load/monitoring circuit on both 4-20 mA loops.
Relay Module A Fault	<0020>	Displayed if Relay Module A has a fault, check wiring and configuration.
Relay Module B Fault	<0040>	Displayed if Relay Module B has a fault, check wiring and configuration.
CONFIG FAULT	<0080>	There is an error in Setup Screen #2 – Number Zones Installed field, or in RDM Setup Screen #1 – Number of MZ monitors on Network field. Check that the number of zones installed for each MZ unit and the actual number of MZ units on the network are properly programmed. Check to ensure that the manifold solenoid cable connector in each MZ unit is securely fastened to its terminal connector. If necessary, reset to the factory default settings.

5.5.5 Reset to Factory Default Settings

NOTICE

Performing this function wipes out all program parameters, alarms, faults, trends and log files.

1. Press and hold down the UP and DOWN arrow keys on the MZ monitor.
2. Cycle AC power OFF then ON.
3. Hold the keys until the second beep is heard.
4. The screen will indicate "This unit has been reset to factory default conditions".
5. Release the keys.
6. Reprogram the MZ as described in this manual.

5.5.6 Clearing System Faults

If the fault condition is associated with an MZ, the monitor will return to normal operation soon after the problem is corrected. At that time the YELLOW LED will turn off and any external alarms connected to the monitor's alarm relays will also turn off. The RD will return to normal operation the next time it polls the affected MZ monitor.

Once the system malfunction has been corrected it may take some time for the fault condition to clear completely. If the fault is associated with a specific zone, the MZ must first cycle back to the affected zone before it returns to normal operation. At that time the YELLOW LED will turn off and any external alarms connected to the monitor's alarm relays will also turn off. The RD will return to normal operation the next time it polls the affected monitor.

5.5.7 Viewing Fault Log

A data log of the last 20 fault conditions is retained in memory. On the Fault Screen, select the LOG option to view a display of the fault log.

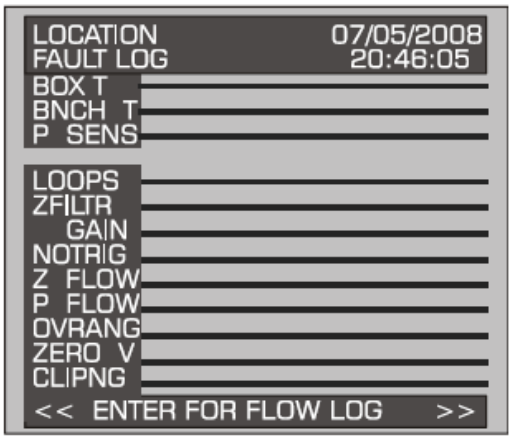

Figure 33 Fault Log Screen

This screen lists potential fault conditions in the left column and displays a check mark indicating which problems were associated with each fault condition as represented by the vertical cursor bar. As you move the bar horizontally using the LEFT/RIGHT cursor keys, the date and time the fault condition was detected is displayed in the upper right hand corner of the display window.

NOTICE

- Anytime the fault status changes, there is an entry in the fault log, both when the fault occurs and when it is cleared.
- The Fault Log can be reset by pressing a combination of the ENTER and RIGHT arrow buttons while viewing the log.

5.5.8 Viewing Flow Log

On the Fault Log screen, press ENTER to access the Flow Log screen. The Flow Log displays the last 20 flow events for all zones and the purge port.

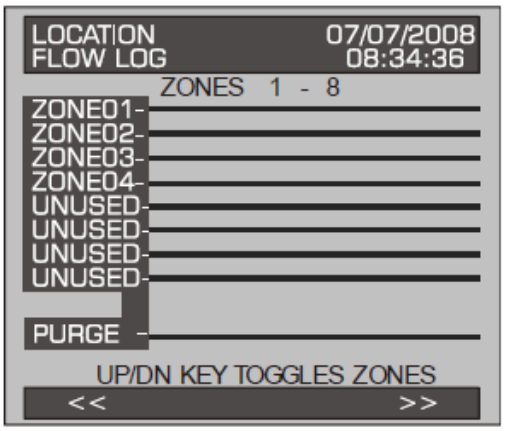

Figure 34 Flow Log Screen

This screen lists the zones in the left column and displays flow data. Use the UP/DOWN buttons to scroll through the zones and the LEFT/RIGHT to scroll through the log data. As you move the bar horizontally, the date and time of the condition is displayed in the upper right hand corner.

The Flow Log can be reset by pressing a combination of the ENTER and RIGHT arrow buttons while viewing the log.

5.6 The Trend Screen

5.6.1 Navigating to the Trend Screen

From the Zone Screen, select the Trend option on the bottom left side. This will open the Trend screen.

The trend graph opens with the cursor located over the most recent data point. Use the LEFT/RIGHT cursor keys to move the cursor to different data points. Holding a key down will cause the cursor to move rapidly across the screen. As you move the cursor position, the date and time of that reading, along with the PPM value, are displayed at the top of the screen above the graph. The trend graph is automatically scaled to accommodate the largest PPM value displayed. The ZOOM OUT and ZOOM IN options allow you to adjust the vertical scale of the graph.

The trend data is stored on a first-in, first-out basis. After 100 trend values have been stored the 101st value will replace the first value stored. Therefore, in normal operation, when entering trend mode the cursor will be located at the most recent data point. The data points to the left of the initial cursor location will be the next most recent. The data point to the right will be the oldest data point in the buffer and will be over written by the next data point.

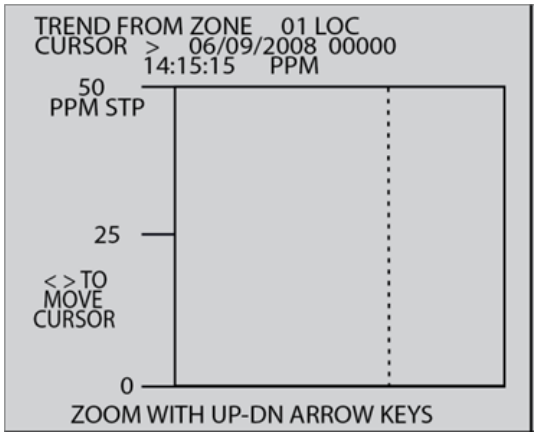

Figure 35 Trend Screen

NOTE: The Trend Data Log can be reset by pressing the ENTER and RIGHT arrow buttons while viewing the log.

When finished, press the ESC key to revert to the previous screen.

5.7 The Calibration Screen

5.7.1 Overview

The Calibration Screen is used to adjust the calibration factor for each gas. It is also used to program the instrument (Halogen only) for new gases.

NOTICE

Changing information on CAL FACTOR will void the factory calibration. MSA recommends a functional test or calibration annually except for NH_3 and CO_2 models where industrial safety standards require a 6 month calibration.

5.7.2 Navigating to the Calibration Screen

On the System Setup screen, select the Calibration option (CAL).

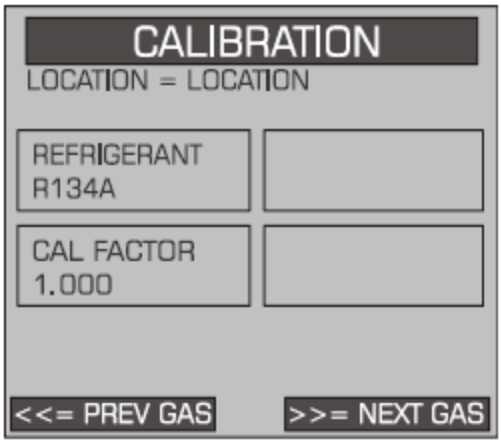

Figure 36 Calibration Screen (HGM and AGM Only)

5.7.3 Calibration Procedure (HGM, AGM, Ethylene, Hydrocarbon and N_2O ONLY)

The CAL FACTOR is determined by sampling a known dilution of the type of gas to be sampled. Calibration is best performed at or near full scale. It can, however, be done at any concentration, and ideally in the range where maximum accuracy is desired down to, but not below, 100 PPM.

A cylinder of the desired gas at a certified PPM level must be used to assure sampling occurs at ambient conditions. A minimum sample size of 5 liters is required.

The MZ monitor should be operating for at least one hour prior to performing a calibration.

Prepare the MZ for sampling by initially setting its CAL FACTOR to 1.000. Next, set up the MZ for a logging interval of zero minutes, and place the MZ monitor in its zone hold mode for the zone you wish to use for calibration purposes.

Connect the sample bag directly to the intake port for the zone you have set up and allow the MZ monitor to sample the entire bag. When sampling is complete, view the trend data for the zone used to sample. Read the measured PPM by placing the cursor on the spikes cause by the sample. If the bag was large enough for multiple samples, average the most stable ones.

The new CAL factor is computed by dividing the known gas value by the measured value. Typically this value will be between 0.95 and 1.05. This value is stored in non-volatile memory.

5.7.4 Adjusting Calibration Factor (HGM, AGM, Ethylene, Hydrocarbon and N2O ONLY)

The factory default cal factor for standard units is 1.000. This value may be different if the high accuracy option is ordered.

Proceed as follows to adjust the current calibration factor:

1. Use the PREV GAS or NEXT GAS options to scroll through the list of gases until the gas you wish to work with is displayed.
2. Select the CAL FACTOR option to edit the value.
3. Use the LEFT/RIGHT cursor keys to move across the entry field and the UP/DOWN cursor keys to modify the individual numbers.
4. Press ENTER to accept the new entry or ESC to revert to the previous setting.

NOTE: The CO_2 calibration is a more complex, 2-point calibration. CO_2 units are factory calibrated and not intended to be calibrated in the field. Refer to 5.7.5 CO2 Atmospheric Concentration for CO_2 calibration screen details.

5.7.5 CO_2 Atmospheric Concentration

Because CO_2 is present in ambient air, a relative reading is used to determine the amount of CO_2 coming from a leak. The CAL screen allows manual entry of the ambient CO_2 concentration. This is typically between 380-400 ppm, however concentrations may vary slightly based on geographic locations or other factors (factory default is 386 ppm).

NOTICE

The ambient CO_2 level is defaultly set to 386 ppm and is unlikely to need changing. If the ambient CO_2 at your location is known to be a value other than this default value, then the instrument's ambient CO_2 setting should be changed.

If needed, adjust the ambient CO_2 concentration as follows:

1. From the SYSTEM SETUP menu, navigate to the CAL screen.
2. Ensure the GAS TYPE setting is selected (see Figure 4-12) and press ENTER.
3. CO_2 calibration curve options are displayed. Simply press ENTER to access the ambient CO_2 concentration setting (PPM IN PURGE). See Figure 4-12.
4. Use the UP/DOWN cursor keys to modify the numbers to set to the appropriate value.
5. Press ENTER to accept the new entry or ESC to revert to the previous setting.
6. Using the internal reset button, see Section 4.7 Establishing the CO2 Sensor Baseline, reset the unit to save the new CO_2 ambient default to memory.

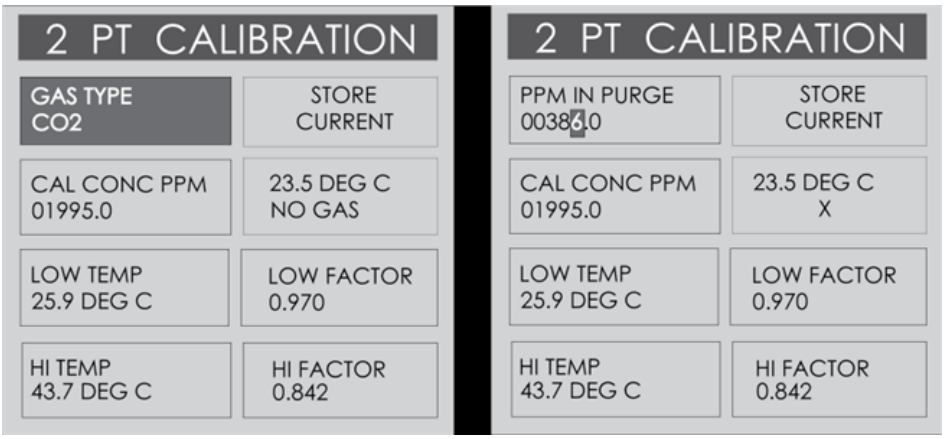

Figure 37 Accessing the CO_2 Atmospheric Concentration Setting (PPM IN PURGE)

NOTICE

Do not alter any other parameters within the Calibration Menu as this will alter the factory calibration.

5.7.6 Programming New Gases (HGM Only)

As new gases come into use the MZ monitor allows the addition of these new gases to its on-board gas library. At the end of the gas library list is an option labeled CUSTOM for adding new gases. From the Calibration Screen use the LEFT/RIGHT arrows to select CUSTOM from the list of gases. Next, press ENTER, and use the UP/DOWN arrow keys to enter the calibration factor. The selection of the matching gas and CAL factor is performed by the MZ Monitor by analyzing the new gas. Once the matching gas is determined, field calibration is possible by using the same procedure as for other gases. When the new gas entry is complete simply setup the appropriate zone for CUSTOM.

Program the instrument for a new gas as follows:

1. From the Calibration Screen, use the PREV GAS or NEXT GAS options to scroll through the list of available choices until the CUSTOM option is displayed.

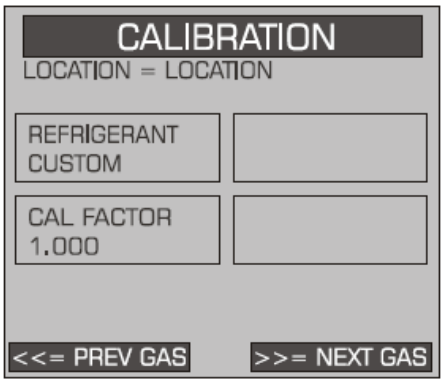

Figure 38 Custom Gas Screen (HGM Only)

2. Select the CUSTOM option. Press ENTER to accept the new entry or ESC to revert to the previous setting.
3. Enter the new CAL Factor as received from MSA Bacharach or as developed in Section 5.7.3 Calibration Procedure (HGM, AGM, Ethylene, Hydrocarbon and N2O ONLY) and Section 5.7.4 Adjusting Calibration Factor (HGM, AGM, Ethylene, Hydrocarbon and N2O ONLY).

5.8 Zone Hold Mode

A zone can be placed on hold and continuously monitored for a length of time determined by the Zone Hold Time value. To place a zone on hold, select the zone at the main run screen, then press and hold down the ENTER key until the unit beeps. The word “HOLDING” will appear in the status box.

WARNING!

When in Zone Hold Mode only the current zone will be monitored if there is a gas concentration near any of the other zones this concentration will not be measured until Zone Hold is removed and the zone is sequenced to sample.

Failure to follow this warning can result in serious personal injury or death.

While in the hold mode, further investigation of the zone’s status can be made by navigating to that Zone’s Setup Screen #1. To release the zone from the hold mode, press and hold down the ENTER key until the unit beeps and the screen display returns to normal.

5.9 The Diagnostic Screen

5.9.1 Navigating to the Diagnostic Screen

On the System Setup screen, select the Diagnostic option (DIAG).

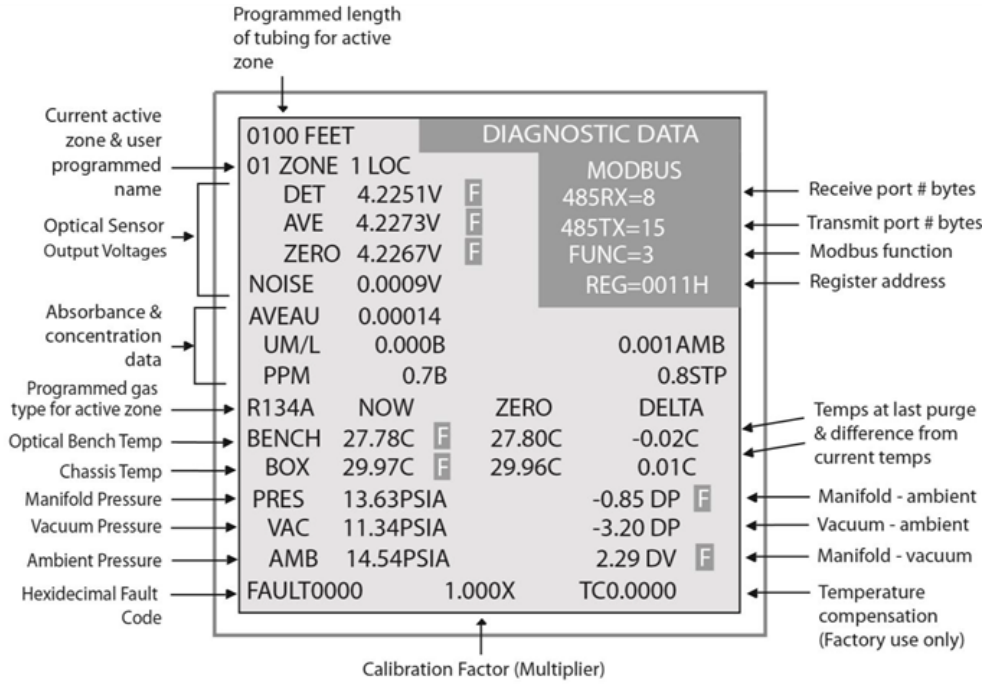

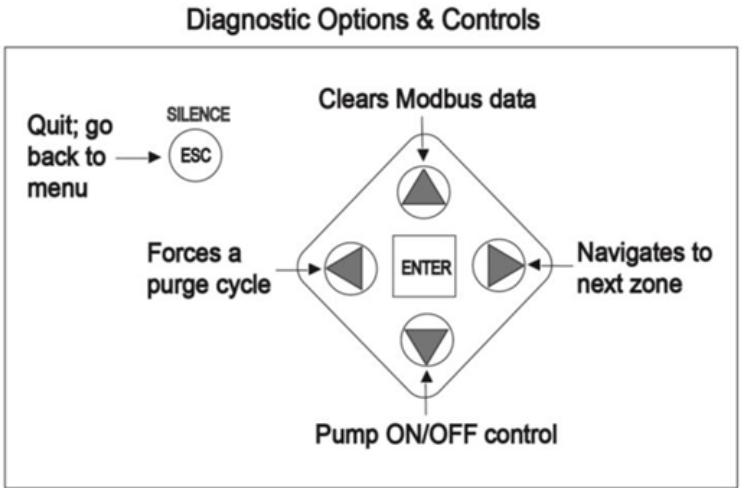

Figure 39 Diagnostic Screen

5.9.2 Diagnostic Screen Overview

The Diagnostic Screen contains sensor data and status information useful for trouble shooting various fault conditions. An explanation of the information provided on each line of this screen is listed below, including normal operating ranges.

Field Name	Description
xxxx FEET	Programmed length of tubing for an active zone.
xx ZONE *name*	Current active zone and user-programmed name. May show “WARM UP” during warm up mode.
DET	Detector Voltage – Peak-to-peak output of the IR sensor. In the absence of gas, this value range is 4.100V to 4.300V.
AVE	Average Detector Voltage – Running average of the values displayed in line 1.
ZERO	Zero Voltage – IR sensor output that was stored during the last purge cycle and has the same range as line 1.
NOISE	A 16 point running average of the noise portion of IR bench output. This reading is valuable mostly when gas is not present.
AVEAU	Average Absorbency – Optical absorbency computed from the Average Detector Voltage and Zero Voltage. In the absence of selected gas, the absorbency is 0.000AU. When sampling desired gas, its value varies proportionally with the gas concentration.
UM/L	uMoles/L – Absolute concentration in micro-moles per liter of gas based on Noise and internal calibration. There are two figures displayed. The first (annotated by a B) is the actual measurement at the IR bench. The second value is corrected to ambient conditions (temperature + pressure).
PPM	Parts Per Million is the volume concentration referenced to standard temperature and pressure and is computed from the Average Absorbency, Zero Temperature and Ambient Pressure. There are two figures displayed. The first (annotated by a B) is the actual PPM at the IR bench. The second is a PPM reading normalized to standard temperature and pressure.
ZERO	Zero Temperature – Displays the sensor and enclosure temperature measured and stored during the last purge cycle in degrees C.
BENCH	Bench Temperature – Current IR sensor temperature in degrees C and the raw voltage coming from the temperature sensor. This value can range from ambient to ambient +15 degrees C.
BOX	Box Temperature – This is the current internal enclosure temperature along with the raw voltage from the temperature sensor, and has the same range as the Bench temperature.
PRES	Pressure – This is the current absolute manifold pressure in PSIA along with the output voltage of the pressure sensor. This value should always be 0.2 to 1.0 PSIA below ambient (AMB).
VAC	Vacuum – The vacuum pressure is measured every purge cycle by closing all sample valves. Its value is typically 2.5 to 4.0 PSIA below ambient pressure.
AMB	Ambient – Ambient pressure is measured every purge cycle with the sample pump off and the manifold open. Its value is weather and altitude dependent and can range from 10.0 to 15.5 PSIA.
FAULT	Fault code in hexadecimal. See Fault Code Table in Appendix 2 RSD-485 Communications Protocol
y.yyyX	Calibration multiplier used when measuring concentration.
TC*x.xxxx*	Temperature Compensation – Voltage applied to sensor output (in volts). Factory use only.
MODBUS data	485 RX=*x* Receive port number of bytes 485 TX=*x* Transmit port number of bytes FUNC Function REG=*xxxxx* Register address

6 Maintenance

WARNING!

- Shock hazard! Always disconnect AC power before opening the enclosure of the monitor.
- The AC power ground wire must first be connected to the monitor's ground stud. Under no circumstances should this monitor be operated without a protective ground. Doing so poses a potential shock hazard, and is a violation of electrical safety standards applicable to this type of equipment.
- Electrical installation should be performed by a certified electrician, and must comply with all applicable NEC/CEC and local electrical safety codes.

Failure to follow these warnings can result in serious personal injury or death.

NOTICE

The MZ monitor contains sensitive electronic components that can be easily damaged. Do not touch nor disturb any components. Do not dislodge electrical wiring or pneumatic tubing.

6.1 Replacement Parts Overview

Part Name	P/N	Description	
Charcoal Filter (Halogen Monitor Only)	3015-3125	The charcoal filter removes refrigerant gas from the purge-air stream during the purging process. Replace the charcoal filter (P/N 3015-3125) approximately every 6 months, when a zero filter fault occurs (fault code <0100>), or after the monitor has been exposed to unusually high levels of refrigerant gas, such as after an evacuation alarm.	
Hydrophobic Filter	0007-1650	The hydrophobic filter prevents water from entering the IR detector. A zone flow fault will occur (fault code <0800>) if this filter becomes blocked. Replace the hydrophobic filter as required (P/N 0007-1650).	
Air Line Tubing	0304-2743 0304-2742	The gas sample line and optional exhaust line should be periodically checked for obvious signs of kinks, damage and contamination. Replace the tubing as required (P/N 0304-2743 or 0304-2742 for Ammonia).	
Line End Filter Assembly	3015-3420	The gas-sample line filter and purge-line termination filters prevent dust and dirt from entering the monitor. Both of the filters should be periodically checked and replaced when there are obvious signs of contamination. • A zone flow fault will occur (fault code <0800>) if the gas-sample line filter becomes blocked. • A purge flow auto will occur (fault code <1000>) if the purge-line filter becomes blocked. Remove the filter from the line and replace it with a new one.	
Line End Filter	3015-2906		
End-of-Line Water Stop	3015-5512	The end-of-line water stops prevent contaminants and moisture from entering the monitor. This filter should be periodically checked and replaced when there are obvious signs of contamination.	

Part Name	P/N	Description
Water Trap	0007-1655	The water trap removes moisture that enters tubing before allowing it to enter the internal components of the MZ unit. The water trap should be emptied often as condensate accumulates. The water trap filter should be periodically checked and replaced when there are obvious signs of contamination.
Fuses	04-2620	The MZ monitor is protected from electrical damage by two, 1A, 250 V, type “F” fuses. Locate the fuse holders and carefully remove the fuses from their holders. Inspect and test the fuses with an ohm meter for continuity. Replace the fuses as required.
Clock Battery	204-0020	The clock battery maintains the correct date and time when AC power is not applied to the monitor. Replace this battery approximately every 5 years. Battery shelf life is 10 years.
Sample Pump	3015-5932	The sample pump draws the gas sample into the monitor through the IR detector and discharges the sample via the exhaust port. To replace the pump, remove the inlet and outlet tubing, disconnect the AC power wires from the pump and remove the pump from the monitor. Install a new sample pump. For sample pumps with a red connector on the AC power wires, please contact MSA Bacharach.
Intake Manifold Kit	3015-5171	Up to three additional intake manifolds (4 zones each) can be installed in the MZ monitor to increase the total capacity to 16 zones. Each manifold requires a 4-zone line end filter kit (3015-3411). (Follow the instructions provided to install the manifolds. Then follow the instructions earlier in this manual to install the air lines and complete the zone programming steps. The MZ setup must also be updated to recognize the new zones.)
	3015-5595	Stainless steel version of 3015-5171.
4–20 mA DC Interface Board	3015-5152	The optional 4–20 mA DC Interface Board allows the operator to take advantage of the current loop interfaces provided for connection of external devices to the MZ monitor. The interface board plugs into the sockets provided on the valve/pump drive PCB, and the external devices are then cabled to the MZ monitor as described earlier in this manual.

6.2 Replacement Parts and Optional Accessories

Replacement Parts

Item Description	Part Number
Battery: Panasonic CR2032, 3V **⚠ WARNING!** In compliance with agency approvals & safety regulations, the battery must be replaced with the specified MSA Bacharach replacement part. **Failure to follow this warning can result in serious personal injury or death.**	0204-0020
Filter: Charcoal, Zero Air	3015-3125
Filter: Hydrophobic (Internal)	0007-1650
Filter: End of Line – Assembly (Termination/gas sample line)	3015-3420
Filter: End-of-Line (Filter Only)	3015-2906
Filter: End-of-line water stop	3015-5512
Charcoal Filter Mounting Bracket	3015-2969
Fuse: 1.0 A, 250 V, Type “F”	0004-2620
Replacement Pump **See 6.1 Replacement Parts Overview for additional replacement details **	3015-5932
Tubing: ¼ in OD (for HGM, CO_2, and ETHYLENE; by the foot)	0304-2743

Item Description	Part Number
Tubing: ¼ in OD (For AGM; by the foot)	0304-2742
¼” to 6 mm Reducer Kit (10)	3015-5389 (10)
¼” to 6 mm Reducer Kit (8)	3015-5390 (8)
IR Bench Replacement Kit (HGM)	3015-4572
IR Bench Replacement Kit (AGM and ETHYLENE)	3015-4492
IR Bench Replacement Kit (CO_2)	3015-5507
Universal Power Supply	3015-5523
Main PC Board Replacement	3015-5483
Main PC Board Replacement	3015-5521
Display PC Board	3015-5522
Power Entry PC Board	3015-5524
Solenoid Valve Manifold Drive PC Board	3015-5542
5 Port Solenoid Block (for HGM, CO_2, and ETHYLENE: Zones 1-4 and purge port)	3015-5080
4 Port Solenoid Block (for HGM, CO_2, and ETHYLENE)	3015-5072
5 Port Stainless Steel Manifold (for AGM; Zones 1-4 and purge port)	3015-5081
4 Port Stainless Steel Manifold (for AGM: Zones 1-4)	3015-5073

Optional Accessories

Item Description	Part Number
Interface Board, 4-20 mA	3015-5152
Variable Flow Regulator	3015-3849
Four Zone Expansion Kit (must order filters [3015-3411] in conjunction with kit)	3015-5171
Four Zone End-of-Line Filters Kit	3015-3411
Splitter Kit (2-way)	3015-5404
Splitter Kit (3-way)	3015-5405
Remote Loop Powered Display Assembly	3015-4992
Manifold Replacement Fittings	3015-5753
RS-485 MZ LON Socket Adaptor PCB Kit	3015-6027
Surge Protectors	
120 V	3015-4121
230 V	3015-5530
4-20 mA	3015-4123
Alarms	
Audible/Visual 120 VAC	3015-3076
Audio-Visual Alarm, 18-28 VDC, Surface Mount	3015-5490
Audio-Visual Alarm, 18-28 VDC, Panel Mount	3015-5491
Audio Alarm, 18-28 VDC, Surface Mount	3015-5492
Audio Alarm, 18-28 VDC, Panel Mount	3015-5493
Annual Maintenance Kits	
4 Zone (5 line end filters, 1 charcoal filter, 1 hydrophobic, 3 end-of-line water stop filters)	3015-5525

Item Description	Part Number
8 Zone (9 line end filters, 1 charcoal filter, 1 hydrophobic, 3 end-of-line water stop filters)	3015-5526
12 Zone (13 line end filters, 1 charcoal filter, 1 hydrophobic, 3 end-of-line water stop filters)	3015-5527
16 Zone (17 line end filters, 1 charcoal filter 1 hydrophobic 3 end-of-line water stop filters)	3015-5528
Gases	
R-22 Gas Cylinder, 100 PPM	3015-3850
R-134a Gas Cylinder, 100 PPM	3015-3851
R-123 Gas Cylinder, 100 PPM	3015-3852
R-22 Gas Verification Kit	3015-3430
R-134a Gas Verification Kit	3015-3437
R-123 Gas Verification Kit	3015-3438
Water Traps	
Manual Drain Water Trap	0007-1655
Manual Drain Water Trap Replacement Filter	0007-1656
Manual Drain Water Trap Mounting Bracket	0007-1657
Communications Kits	
N2 JCI Metasys Communications Kit	3015-4230
LonWorks Communications Kit	3015-4231
BACnet Communications Kit	3015-5606

6.3 Troubleshooting

Certain critical faults may be corrected by checking and adjusting the detector voltage and/or emitter power. These faults include:

- CLIPPING FAULT <8000>
- REZERO VOLT TOL <4000>
- OVER RANGE DETECTED <2000>
- GAIN SET FAULT <0200>

To troubleshoot any of the above faults, use the procedure listed below.

1. With the monitor in either Warm Up Mode (flashing green LED) or Sampling Mode (solid green LED), access the Setup Menu by pressing the ENTER key twice.
2. Scroll to the bottom right of the screen to select the “Service Mode Entry” option.
3. With the “Service Mode Entry” option highlighted, press ENTER twice to enter Service Mode.
4. Scroll to the “SYSTEM” option and press ENTER.
5. Scroll to the “MORE” option and press ENTER. Note that “MORE” will flash when it is selected.
6. Scroll to and select the “IR DIGIPOT” option (see below) and press ENTER.
7. Use the UP and DOWN arrows to adjust the MW reading to 450 (or as close as possible). Then press ESC once.

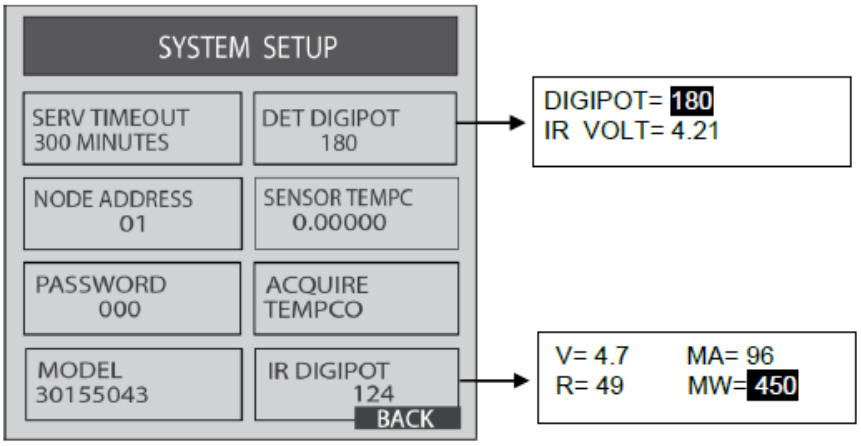

Figure 40 Sample DIGIPOT Readings

8. Scroll to “DET DIGIPOT” option (see above) and press ENTER.
9. Use the UP and DOWN arrows to adjust the IR VOLT reading to 4.20 (or as close as possible). When at the proper value, press ESC once.

NOTICE

If IR VOLT does not reach 4.200 ±0.100 volts when adjusting the DIGIPOT, go to step 6 to lower the IR emitter setting. If the IR emitter setting is 450 ±20 mW, adjust IR emitter setting to 375 ±20 mW. Repeat step 8 with new IR emitter setting.

10. Press ESC to save.
11. Press ESC to get to the System Menu. Scroll to Service Mode and press ENTER twice to leave Service Mode. Press ESC once and allow the instrument to complete a pressure check and purge cycle (approximately 2 minutes). If the faults cannot be cleared using the above procedure, call the factory for further assistance.

Appendix 1 Recommended Refrigerant Gas Alarm Settings

WARNING!

The values in this table are recommendations only. The alarm settings must be chosen to meet the specific needs of the application and with consideration given to applicable laws and regulations in the location of installation.

Failure to follow this warning can result in serious personal injury or death.

Gas	Alarm Settings (PPM)			Gas	Alarm Settings (PPM)		
	Leak	Spill	Evacuate		Leak	Spill	Evacuate
CO_2 / R-744	1500	2000	3000	R422D	10	300	500
FA188	10	300	500	R424A	10	300	500
FC72	10	300	500	R426A	10	300	500
H1301	10	300	500	R427A	10	300	500
H1211	10	300	500	R438A	10	300	500
H2402	10	300	500	R500	10	300	500
H1234YF	10	300	500	R502	10	300	500
HFP	10	300	500	R503	10	300	500
N1230	10	300	500	R507	10	300	500
NH_3 / R-717	50	150	300	R508B	10	300	500
R-11	100	300	500	H1234ZE	10	300	500
R-12	10	300	500	R407F	10	300	500
R-21	10	300	500	N7100	10	200	300
R-22	10	300	500	N7200	10	50	100
R-23	10	300	500	N7300	10	20	50
R-32	10	300	500	N7600	3	5	8
R-113	10	300	500	H1233ZDE	10	300	500
R-114	10	300	500	N4710	10	300	500
R-123	10	35	50	R-448A	10	300	500
R-124	10	300	500	R-449A	10	300	500
R-125	10	300	500	R-513A	10	300	500
R-134A	10	300	500	R-452A	10	300	500
R-227	10	300	500	R-452B	10	300	500
R-236FA	10	300	500	R-514A	10	300	500
R-245FA	10	300	500	R407F	10	300	500
R-401A	10	300	500	H1336E	10	300	500
R-402A	10	300	500	H1336Z	10	300	500
R-402B	10	300	500	N5110	10	300	500
R-404A	10	300	500	R454A	10	300	500
R-407A	10	300	500	R454B	10	300	500
R-408A	10	300	500	R454C	10	300	500
R407C	10	300	500	R455A	10	300	500

Gas	Alarm Settings (PPM)			Gas	Alarm Settings (PPM)		
	Leak	Spill	Evacuate		Leak	Spill	Evacuate
R409A	10	300	500	H1224YDZ	10	300	500
R410A	10	300	500	FC3284	10	300	500
R422A	10	300	500	C_2H_2 / R1150	25	100	500
Hydrocarbons/R-290, R600a	25	100	500	N_2O	25	50	100

Appendix 2 RSD-485 Communications Protocol

Overview

The following instructions are intended as a guide for integrating the MZ network into a Building Management System. If you are unfamiliar with complex systems of this type, it is recommended that you contact Bacharach for technical assistance.

MODBUS RTU Protocol

The MZ monitor communicates with master devices (such as the Remote Display or a Building Management System) over the RS-485 serial interface. Because the monitor is configured with a two wire RS-485 serial bus, data transmission occurs in “half-duplex” mode. Therefore, only one device may be in transmit mode at any given time.

This document specifies the MODBUS communications protocol as implemented on the applicable instruments. Programmers should refer to the MODBUS Protocol Reference Guide for details and more comprehensive instructions. The guide is available at www.modbus.org. Specific communications software is available at: https://www.mybacharach.com/product-support/manuals-downloads/.

MZ MODBUS RTU Operation

The MZ and RD are equipped to communicate with other equipment using the MODBUS RTU protocol. Using this communications channel a MODBUS master device may communicate with up to 15 MZ monitors on a communications network, exchanging measurement information, alarm data, fault data, history (logs and trends) and setup information. Additionally, the MODBUS master can control the operating state of an MZ monitor, placing the MZ in any of its different operating modes. The network may be configured so that the MZ monitors are connected directly to the MODBUS master device, or the MODBUS master device may communicate with the MZs through the RD.

NOTE: This document was written with the assumption that the reader is familiar with the various setup parameters and operational modes for the Multi-Zone.

Protocol Details

A 2-wire RS-485 bus is used for transmission, therefore communications occurs in a Half-Duplex mode. The MZ is a slave device and will respond to queries in the MODBUS RTU format from a master device.

Three MODBUS functions are supported. They are function 03 (read holding register), function 06 (write single register), and function 16 (Preset Multiple registers – for block mode only). Please refer to the MODBUS Protocol Reference Guide (available at www.modicon.com/techpubs/techPubNew/PI_MBUS_300.pdf) for protocol detail and use instructions.

In addition to the standard register groups found in the 2000 and 3000 address ranges, a block mode access is provided for OEMs who need efficient access to the complete range of system variables using the least amount of queries. The block modedata is organized into structures (internal to the MZ monitor) which can be accessed by the MODBUS registers defined in this document. A corresponding set of data structures should be maintained by the master device. These master device data structures become the destination for responses to read queries and sources for preset register commands. When a read holding register query is made by the master device the MZ monitor responds by sending the contents of the structure referenced by the specified register. After the master validates the MZ response using the CRC bytes, it must then move the data into its matching data structure before individual items may be accessed or modified. Therefore, the master data structure should correspond to the MZ data structure byte for byte. Note that some data structures have been divided into multiple registers due to MODBUS RTU message length constrains. To change a setting in the MZ monitor, the master device first reads the register structure that contains the data item to be modified, makes the desired change, then sends the structure back using the preset multiple register function. If the transaction is successful, the MZ monitor sends the appropriate MODBUS response. It is the responsibility of the master device, when making modifications, to insure that all parameters transferred are within the working limits of the MZ.

NOTICE

Each time parameters are modified and sent back to the monitor using function 16 (preset multiple registers), the new values are written to the monitor's non-volatile FLASH memory. Due to the finite write life of the FLASH memory device (10K-100K write cycles), modifying and writing variables should be performed on an “as needed” basis and not periodically. Exceeding the FLASH write life can result in memory corruption, requiring a CPU board replacement.

MZ Monitor Polling

After the MZ monitors are setup and operating, the master device need only poll each monitor for its status register which contains summary data of the monitors' alarms, faults, and operating state. If exceptions are detected through the status register and more details are required, additional registers can be examined. Also if current PPM values are required, the PPM register provides access to current PPM values for all zones. The MZ monitor requires a minimum of 20 seconds to complete a gas concentration measurement for a single zone. Therefore, it is not necessary to poll the MZ monitor more frequently than once every 15-20 seconds, as there will not be any new data available/obtained by more frequent polling. In fact, excessive polling will slow the operation of the MZ. Under no circumstances should the MZ monitor be continuously polled at rate faster than 500 ms, as this could result in erroneous readings by the MZ monitor.

Network Topologies

MZ monitors may be connected directly to the MODBUS network or they may be connected to the network through a Remote Display. In either case, each MZ monitor must have a unique node ID. Up to 15 MZ monitors can be connected directly to the MODBUS network.

If MZ monitors are accessed via an RD connected to a MODBUS network, the RD "BMS enabled" parameter must be set equal to "1" via the "RDM SETUP" screen on the Remote Display. The same commands and registers are used to communicate with the MZ directly or through the RD. If the communications are through the RD, it monitors each MODBUS message to determine if the message is intended for one of the MZ monitors it is connected to. If it is, the RD passes the message through to the MZ monitors. If it is not, the message is not passed through. The RD does not make any modifications to MODBUS messages. It simply passes the query through to the MZ monitor, and passes the response back to the MODBUS master. In other words, it allows the MZ monitors to be logically connected to the MODBUS network, when physically they are connected to the local RD network.

NOTICE

It is very important to understand that the RD will only pass messages through to the MZ monitor when the RD is either in the "SYSTEM" screen or the "ZONE VIEW" screen. If the RD is in any other screen, it will return a MODBUS "busy" exception response (exception code 06).

All RD screens, except the SYSTEM and ZONE VIEW screens, have a 10 minute timeout interval. After this, the screen will return to the SYSTEM or ZONE VIEW screen, depending on which one was last displayed. The RD may also be password protected so that a password entry is required in order to view screens other than the SYSTEM or ZONE VIEW screen.

Key Comm Protocol Parameters

Parameter	Description
MODBUS Mode	RTU only
MZ Baud Rate	Default is 19,200. Programmable as defined in system data register.
Parity	No Parity
Stop Bits	Default is 1. Can be set for 2 via System data register.
Maximum Response Time	4,000 ms when directly accessing the MZ monitor. 8,000 ms when accessing the MZ monitor through the RD.
Error Checking	CRC per MODBUS specifications

NOTE: All data sent out from the MZ is in "little endian" byte order (least significant byte followed by most significant byte). This should be taken into account if the master that process the data is a "big endian" type. Non-data information (starting address, number of points, etc.) follows normal MODBUS protocol, which is Big Endian.

MODBUS Exception Responses

The following MODBUS exception responses are supported by the unit.

01	Illegal Function
02	Illegal Data Address
03	Illegal Data Value
06	Slave Device Busy (Occurs when MZ is connected to the bus through an RD and the RD is not in the SYSTEM or ZONE VIEW screen)

MODBUS Gas Enumeration

The following table provides decimal and hexadecimal MODBUS enumerations for supported refrigerant.

Refrigerant Gas	DEC	HEX		Refrigerant Gas	DEC	HEX
CO_2 / R-744[1]	0	00		R-125	31	1F
NH_3 / R-717[1]	0	00		H1211	32	20
Ethylene/R-1150[1]	0	00		H2402	33	21
Hydrocarbon/R-290[1]	0	00		R-245FA	34	22
Hydrocarbon/R-600A[1]	1	01		R-422A	35	23
R-11	0	00		R-422D	36	24
R-12	1	01		R-427A	37	25
R-22	2	02		H1234YF	38	26
R-23	3	03		R-424A	39	27
R-113	4	04		R-426A	40	28
R-114	5	05		R-438A	41	29
R-123	6	06		R-32	42	2A
R-124	7	07		H1234ZE	43	2B
R-134a	8	08		R-407F	44	2C
R-401A	9	09		N7100	45	2D
R-402A	10	0A		N7200	46	2E
R-402B	11	0B		N7300	47	2F
R-404A	12	0C		N7600	48	30
R-407A	13	0D		H1233ZDE	49	31
R-407C	14	0E		N4710	50	32
R-409A	15	0F		R-448A	51	33
R-410A	16	10		R-449A	52	34
R-500	17	11		R-513A	53	35
R-502	18	12		R-452A	54	36
R-503	19	13		R-452B	55	37
R-507	20	14		R-514A	56	38
R-508B	21	15		H1336E	57	39
H1301	22	16		H1336Z	58	3A
R-408A	23	17		N5110	59	3B
FA188	24	18		R454A	60	3C

Refrigerant Gas	DEC	HEX		Refrigerant Gas	DEC	HEX
R-236FA	25	19		R454B	61	3D
N1230	26	1A		R454C	62	3E
R-227	27	1B		R455A	63	3F
HFP	28	1C		H1224ydZ	64	40
FC72	29	1D		FC3284	65	41
R-21	30	1E				

1 - The C02, NH3, Ethylene and Hydrocarbon models are a separate P/N and may have the same enumeration as other separate P/N's. The HGM includes all gases other than CO2, NH3, Ethylene and Hydrocarbon R-290 and R-600a.

Standard Register Summary

Dynamic Register Summary (2000 Series; R; Function Code 03)

Register Address	Description	Type	Range
2000	FAULT CODE	UNSIGNED INT	0-695535
2001	PPM ZONE 1	UNSIGNED INT	0-695535
2002	PPM ZONE 2	UNSIGNED INT	0-695535
2003	PPM ZONE 3	UNSIGNED INT	0-695535
2004	PPM ZONE 4	UNSIGNED INT	0-695535
2005	PPM ZONE 5	UNSIGNED INT	0-695535
2006	PPM ZONE 6	UNSIGNED INT	0-695535
2007	PPM ZONE 7	UNSIGNED INT	0-695535
2008	PPM ZONE 8	UNSIGNED INT	0-695535
2009	PPM ZONE 9	UNSIGNED INT	0-695535
2010	PPM ZONE 10	UNSIGNED INT	0-695535
2011	PPM ZONE 11	UNSIGNED INT	0-695535
2012	PPM ZONE 12	UNSIGNED INT	0-695535
2013	PPM ZONE 13	UNSIGNED INT	0-695535
2014	PPM ZONE 14	UNSIGNED INT	0-695535
2015	PPM ZONE 15	UNSIGNED INT	0-695535
2016	PPM ZONE 16	UNSIGNED INT	0-695535
2017	ALARM LEVEL ZONE 1	UNSIGNED INT	0-3
2018	ALARM LEVEL ZONE 2	UNSIGNED INT	0-3
2019	ALARM LEVEL ZONE 3	UNSIGNED INT	0-3
2020	ALARM LEVEL ZONE 4	UNSIGNED INT	0-3
2021	ALARM LEVEL ZONE 5	UNSIGNED INT	0-3
2022	ALARM LEVEL ZONE 6	UNSIGNED INT	0-3
2023	ALARM LEVEL ZONE 7	UNSIGNED INT	0-3
2024	ALARM LEVEL ZONE 8	UNSIGNED INT	0-3
2025	ALARM LEVEL ZONE 9	UNSIGNED INT	0-3
2026	ALARM LEVEL ZONE 10	UNSIGNED INT	0-3

Register Address	Description	Type	Range
2027	ALARM LEVEL ZONE 11	UNSIGNED INT	0-3
2028	ALARM LEVEL ZONE 12	UNSIGNED INT	0-3
2029	ALARM LEVEL ZONE 13	UNSIGNED INT	0-3
2030	ALARM LEVEL ZONE 14	UNSIGNED INT	0-3
2031	ALARM LEVEL ZONE 15	UNSIGNED INT	0-3
2032	ALARM LEVEL ZONE 16	UNSIGNED INT	0-3
2033	(STATUS) MODE	UNSIGNED INT	0-3
2034	(STATUS) STATE	UNSIGNED INT	0-4
2035	RESERVED	UNSIGNED INT	0
2036	(STATUS) ACTIVE ZONE	UNSIGNED INT	1-16
2037	(STATUS) MAX ALARM	UNSIGNED INT	0-3
2038	(STATUS) ACTIVE ALARM COUNT	UNSIGNED INT	0-16
2039	(STATUS) ACK'D ALARM COUNT	UNSIGNED INT	0-16
2040	RESERVED	UNSIGNED INT	0
2041	(STATUS) FAULT CODE	UNSIGNED INT	0-65535
2042	(STATUS) AUDIBLE ALARM	UNSIGNED INT	0-1
2043	(STATUS) SILENCED	UNSIGNED INT	0-1
2044	(STATUS) HIGHEST CONC ZONE	UNSIGNED INT	1-16
2045	(STATUS) HIGHEST CONCENTRATION	UNSIGNED INT	0-65535
2046	(STATUS) ZONES INSTALLED	UNSIGNED INT	4, 8, 12, 16
2047	(SENSOR) MANIFOLD PRESSURE x100	UNSIGNED INT	0-1600
2048	(SENSOR) AMBIENT PRESSURE x100	UNSIGNED INT	0-1600
2049	(SENSOR) VACUUM PRESSURE x100	UNSIGNED INT	0-1600
2050	(SENSOR) BENCH TEMP x100	SIGNED INT	0-6000
2051	(SENSOR) AVE VOLTAGE x1000	UNSIGNED INT	0-5000
2052	(SENSOR) ZERO VOLTS x1000	UNSIGNED INT	0-5000
2053	(SENSOR) AVE AU x10000	UNSIGNED INT	0-30000
2054	(SENSOR) BENCH PPM	UNSIGNED INT	0-65535

Block Mode Register Summary

Summary of Registers

Register Name Number	HEX	Decimal	Description	
System Data	0x0010	15	R/W	System Setup Data
Status	0x0011	17	R/W	Operating summary of faults, alarms and status
Zone Data	0x12xx	4609-4630	R/W	Setup data for up to 16 zones (xx defines zone number)
CAL Data	0x0014	20	R/W	Cal Factors for all gases

Register Name Number	HEX	Decimal	Description	
Date/Time	0x0015	21	R/W	Set MZ date & time
Sensor Data	0x0016	22	R	Raw measurement of sensors
Rel. Hold	0x0017	23	W	Release MZ out of hold mode
Hold Zone	0x0018	24	W	Put MZ into hold mode
Fault Log	0x19xx	6400-6401	R	20 most recent fault events (xx = 00 or 01)
Flow Log	0x001F	31	R	20 most recent flow fault events
Alarm Log	0x1Axx	6656-6658	R	20 most recent alarm events (xx = 00, 01, or 02)
Serv. Mode	0x001B	27	W	Puts MZ into service mode
Rel Serv.	0x001C	28	W	Release MZ from service mode
PPM	0x001E	30	R	PPM values for all zones
Zone Log	0x3yxx	0-6	Trend data for each MZ zone [y = zone # (starting at 0), xx = 00 - 06] Data	

Data Type Abbreviations	
C	Character
Float	Floating Point
I	Integer
TIM	Time
UI	Unsigned Integer

System Data Register 0x0010 (16 Dec) (R/W, 54 Bytes)

Variable	Type	Length	Description
Type	UI	2 bytes	Indicates EEPROM has been initialized if value = 300 DO NOT MODIFY
REV	Float	4 bytes	Firmware Rev Level DO NOT MODIFY
UNUSED	UI	2 bytes	Firmware Serial Number DO NOT MODIFY
Node	UC	1 byte	Network Slave Node # (valid values are 1-15). The default is that indicated by the Node DIP Switch on main board.
Location	C	13 bytes	Array defining text name of unit
Stop_Bits	C	1 byte	Number of stop bits used in the MZ data stream. Default = 1. Other available value is 2
Aud_Alarm	UC	1 byte	Sounds internal board buzzer on condition; 0 = no buzzer; 1= Alarm; 2=Fault; 3=Leak; 4=Spill; 5=Evacuate; 6=Monitor Off line (DEFAULT = 0)
Alarm_Ack_Mode	UC	1 byte	Defines Alarm Operation. Manual Acknowledge = 0; Auto Acknowledge = 1 (DEFAULT = 0)
Num_Zones	UC	1 byte	Number of install zones (Value initialized during auto detect during Power On Self Test).
UNUSED	TIM	13 bytes	UNUSED

Variable	Type	Length	Description
Rezero_Mode	UC	1 byte	Defines re-zero mode. Auto Re-zero = 0; Re-zero every zone = 1 (DEFAULT = 0)
Hold_Time	UI	2 bytes	Length of zone hold interval in minutes (DEFAULT = 15 minutes)
UNUSED	UC	1 byte	Minimum detection limit (in PPM). Concentrations less than or equal this value will read as 0 PPM (DEFAULT = 0 PPM)
Avg_Size	UC	1 byte	Size of running average used in computing PPM value. DO NOT MODIFY.
Loop2_factor	Float	4 bytes	Defines PPM current loop output. (DEFAULT = 0.16 mA/PPM)
Serv_Mode_TO	UI	2 bytes	Service Mode Timeout value (in minutes). (DEFAULT = 60 MINUTES)
RS485_BAUD	UI	2 bytes	BAUD RATE for RS-485 connection (between RD and MZ monitor or MODBUS master and MZ depending on the Network topology). Default=9 (19.2K); other values are 8=9600, 7=4800
Mode	UI	2 bytes	UNUSED

Status Register 0x011 (17 Dec) (R/W, 10 Bytes)

Variable	Type	Length	Description
Mode	UC	1 byte	Defines Operating Mode of MZ. 0 = normal Mode; 1 = Zone_Hold Mode; 2 = Diagnostic Mode; 3 = Service mode. DO NOT MODIFY (use zone hold register or service mode register to change this parameter)
State	UC	1 byte	Defines MZ Current State. 0 = Idle; 1 = Sampling; 2 = Zeroing; 3 = Warm Up, 4 = Pressure Check DO NOT MODIFY
Measuring	UC	1 byte	Value = 1 if unit is acquiring detector signal for running avg. DO NOT MODIFY
Active_Zone	UC	1 byte	Current Zone being checked. 0=zone 1, 1=zone 2, etc.
Max_Alarm	UC	1 byte	Indicates highest non-acknowledged alarm level DO NOT MODIFY
Alarm_Count	UC	1 byte	Number of alarms that are currently active. DO NOT MODIFY
UNUSED	UC	1 byte	UNUSED
Loop_Card	UC	1 byte	Value = 1 if 4-20 mA card has been detected. DO NOT MODIFY
Fault	UI	2 bytes	Fault Flag Structure uses bitwise access to 16 bit word as defined in the table below.

Fault Code Table

BIT	Fault Type	Code	Description
15	CLIPPING FAULT	0x8000	Sensor output voltage too high
14	ZERO RANGE FAULT	0x4000	Sensor output voltage outside limits during purge
13	OVER RANGE FAULT	0x2000	Gas concentration above measurable range
12	PURGE FLOW FAULT	0x1000	No flow detected during purge cycle
11	ZONE FLOW FAULT	0x0800	No flow detected during sample cycle
10	A2D FAULT	0x0400	Analog to digital converter not working
9	GAIN SET FAULT	0x0200	Digipot gain setting out of normal range
8	ZERO FILTER FAULT	0x0100	Charcoal filter (if used) needs replacement
7	CONFIG FAULT	0x0080	No zones are enabled

BIT	Fault Type	Code	Description
6	UNUSED FAULT 2	0x0040	
5	UNUSED FAULT 1	0x0020	
4	LOOP FAULT	0x0010	Current loop is open
3	RS485 FAULT	0x0008	Communications error
2	MANIFOLD P FAULT	0x0004	Pressure sensor readings are out of range
1	BENCH T FAULT	0x0002	Sensor temperature is out of range
0	BOX T FAULT	0x0001	Chassis temperature is out of range

Zone Data Register 0x12xx (R/W, 78 Bytes)

Each zone for an MZ has a separate zone data structure that is 78 bytes long. The zone number is the low order byte in the register address (i.e., Zone 1 data register = 0x1201h).

Variable	Type	Length	Description
Location	C	13 bytes	13 byte array, Alpha Numeric Description or Name of Zone
Flow OK	UC	1 byte	Status of Flow check. 1 indicates flow check is good. DO NOT MODIFY.
Refrigerant Type	UC	1 byte	See Notice 1 Below (DEFAULT = R134a)
Distance	UI	2 bytes	Zone Tubing Length (in feet) (DEFAULT = 100 feet [approx. 30.5 meters])
Zone Temp	I	2 bytes	Average temperature at zone (degrees C) (DEFAULT = 25°C)
Concentration	Float	4 bytes	Last Measured concentrations (uM/L) DO NOT MODIFY
Concentration2	Float	4 bytes	Last Measured concentration (PPM) DO NOT MODIFY
Alarm Ack	UC	1 byte	Set value to 1 to acknowledge Alarm. **NOTE:** MZ will reset this byte to 0 when the Alarm variable is 0 and zone in alarm is sampled. If the alarm variable increases (leak>spill or spill>evac) the MZ will reset this byte to 0.
Alarm	UC	1 byte	Alarm Status; 0 = no alarm, 1 = leak; 2 = spill; 3 = evac.
Leak Level	UI	2 bytes	Level to trigger a leak alarm (in PPM) (DEFAULT = 100)
Spill Level	UI	2 bytes	Level to trigger a spill alarm (in PPM) (DEFAULT = 300)
Evac Level	UI	2 bytes	Level to trigger a evacuate alarm (in PPM) (DEFAULT = 500)
Peak PPM	UI	2 bytes	Highest Recorded PPM in zone
Peak Time	TIM	13 bytes	Date and time of highest peak (see Notice 2 for format)
Alarm Time	TIM	13 bytes	Date and time of last alarm (see Notice 2 for format)
Alarm Ack/Time		13 bytes	
Log Interval	UI	2 bytes	Number of minutes between Log entries (DEFAULT = 1440)

NOTICE

- Refer to Appendix 1 Recommended Refrigerant Gas Alarm Settings.
- Time Structure Format consists of 13 unsigned character types. They are 1 second digit, 10 second digit, 1 minute digit, 10 minute digit, 1 hour digit, 10 hour digit, 1 day digit, 10 day digit, 1 month digit, 10 month digit, 1 year digit, 10 year digit, last byte is unused.

Alarms and Alarm Acknowledge

The Multi-Zone can be operated in two different alarm acknowledge modes, Auto and Manual (set via the alarm_ack_ mode variable in the system data register). For purposes of this discussion, the term “Alarm” refers to an MZ state where the alarm light is on and the appropriate alarm relay is activated. The term “Alarm condition” refers to the external condition (i.e., refrigerant leak) that initially causes the MZ monitor to go into an alarm. If an alarm occurs it can be handled in one of 3 ways.

1. **Non-Latching Mode.** This mode is enabled by setting the AUTO_ACK_MODE parameter in the system register to “1”. In this mode, if an alarm condition occurs an MZ alarm will be created. If the alarm condition is subsequently removed, the MZ alarm will automatically be cleared by the MZ monitor when the zone in alarm is sampled “clear”. Note, in this mode of operation, it is possible for an alarm to occur and be cleared without user or MODBUS master intervention. If this is the case, the only evidence of the alarm would be contained in the MZ alarm log.
2. **Latching Mode with Silence.** This mode is enabled by setting the AUTO_ACK_MODE in the system register to “0”. In this mode, if an alarm condition occurs, an MZ alarm will be created. In order for the alarm to be removed the MODBUS master will write a “0” to the ALARM parameter in the ZONE register. This will cause the alarm to be “silenced” in the MZ monitor (i.e., the alarm relays will return to their normal state and the ALARM lamp will be extinguished). The next time the zone with the alarm condition is sampled, if the alarm condition still exists, the alarm will be reactivated and the alarm parameter will be reset to “1” in the MZ. Otherwise, if the alarm condition has cleared, no further action is required and normal operation will resume.
3. **Latching Mode without Silence.** This mode is enabled by setting the AUTO_ACK_MODE in the system register to “0”. In this mode, if an alarm condition occurs, an MZ alarm will be created. The MZ MODBUS master will then write a “1” to the ALARM ACK parameter in the zone register. The alarm will continue to persists (i.e., Relays in alarm state and Alarm light on) until the offending zone is sampled and no alarm condition is detected. At that point, the ALARM ACK parameter is automatically cleared by the MZ monitor, as is the ALARM parameter.

NOTE: If the ALARM ACK parameter is set to “1” and the ALARM CONDITION is upgraded (from leak to spill, or spill to evacuate) the ALARM ACK parameter will automatically be cleared to “0” by the MZ.

Date Time Register 0x0015 (21 Dec) (R/W, 14B)

Variable	Type	Length	Description
Date_Time	Time	14 bytes	Contains current time and date. Structure is defined as in note 2 of zone data

Time Structure Format consists of 14 unsigned character types. They are 1 second digit, 10 second digit, 1 minute digit, 10 minute digit, 1 hour digit, 10 hour digit, a day digit, 10 day digit, 1 month digit, 10 month digit, 1 year digit, 10 year digit, day of the week, last byte is unused.

Sensor Date Register 0x0016h (22 Dec) (R, 82B)

Variable	Type	Length	Description
Pressure	Float	4	Manifold Pressure is PSIA
P_Volts	Float	4	Pressure sensor output Voltage
Vacuum_P	Float	4	Pressure with all value closed and pump on in PSIA
Ambient_P	Float	4	Absolute Ambient Pressure in PSIA
Box_T	Float	4	Enclosure Temperature in Degrees C
Box_T_Volts	Float	4	Box temp sensor output voltage
Bench_T	Float	4	Optical bench temperature in Degrees C
Bench_T_Volts	Float	4	Bench temp sensor output voltage
Bench_Z_T	Float	4	Optical bench temp in degrees C at last zero interval
Box_Z_T	Float	4	Box temp in degrees C at last zeroing

Variable	Type	Length	Description
PkPk_int	UI	2	Current peak to peak A/D counts from detector
PkPk	Float	4	Current peak to peak voltage from detector
Ave_PkPk	Float	4	Running average voltage from detector
Zero_PkPk	Float	4	Voltage measured at last zeroing
Noise	Float	4	Largest Change in running average
AU	Float	4	Current absorbance value
Ave_AU	Float	4	Running Average of absorbance level
Bench_PPM	Float	4	PPM in bench based on zone gas selection (uncorrected for pressure and temperature)
STP_PPM	Float	4	PPM corrected to STP (1 atm, 25 deg C)
Bench_UML	Float	4	Micromoles/liter in bench (uncorrected)
Ambient_UML	Float	4	Micromoles/liter corrected to ambient pressure

Release Zone Hold Register 0x0017h (23 Dec) (W, 10B)

Variable	Type	Length	Description
Rel_Hold	*	*	See description of STATUS REGISTER

Hold Zone Register 0x0018h (23 Dec) (W, 10B)

Variable	Type	Length	Description
Zone_Hold	*	*	See description of STATUS REGISTER

MZ Hold Mode

The MZ monitor can be made to hold or “dwell” on a particular zone if necessary. The length of the hold time is defined by the HOLD TIME parameter in the System Data Register.

Placing the MZ Monitor into hold mode:

1. Read the MZ Status Register (0x0011h).
2. Modify the content of the status register structure to change the MODE parameter to zone hold mode. Active zone parameter to the zone you wish to hold.
3. Send this updated status register structure back to the MZ using PRESET MULTIPLE REGISTER COMMAND to the HOLD ZONE REGISTER (0x0018h).

Releasing the Zone Hold:

1. Read the MZ monitor Status Register (0x0011h).
2. Modify the content of the status register to change the MODE parameter to normal mode. Active zone parameter to the zone which you would like to resume normal activity on.
3. Send this updated status register structure back to the MZ using PRESET MULTIPLE REGISTER COMMAND to the RELEASE HOLD REGISTER (0x0017h).

Fault Log Register 0x1900-01 (6400-6401 Dec) (R, 302B)

These registers contain the 20 most recent fault events, the time they occurred, and a pointer to the most recent event. The data is split into 2 registers. The first register contains 200 bytes and the second register contains 102 bytes. The results of these two register reads should be recombined into the Fault Log Data Structure after both have been received.

Variable	Type	Length	Description
Fault	UI	40 bytes	20 most recent fault events. Each event is decoded as indicated in Fault Flag Structure given after the Status Register Description
Time	TIM	260 bytes	Time of each fault occurrence. TIM value as defined in NOTE 2 of Zone Data
Ptr	UC	1 byte	Pointer to most recent event
Unused	UC	1 byte	Unused

Flow Log Register 0x001F (31 Dec) (R, 142B)

Variable	Type	Length	Description
Flow Event	UI	40 bytes	20 most recent flow fault events. Each bit of the unsigned int represents a zone and a 1 indicates no flow. Zero indicates flow.
Purge Flow Event	UC	20 bytes	20 most recent flow fault events where a 1 indicates no flow. Zero indicates flow.
Time	TIM	80 bytes	Time/date stamps for 20 most recent logged flow events. This variable is an unsigned long integer formatted as seconds since Jan 1 of 1980
Ptr	UC	1 byte	Pointer to most recent event
Unused	UC	1 byte	Unused

Alarm Log Register 0x1A00-02 (6656-58 Dec) (R, 582B)

These registers contain the 20 most recent alarm events, the time they occurred, and a pointer to the most recent event. The data is split into 3 registers and should be recombined into an appropriate structure after all three registers have been received. Register 0x1A00h contain 200 bytes, Register 0x1A01h contains 200 bytes, and register 0x1A02h contains 181 bytes.

Variable	Type	Length	Description
Event	UC	320 bytes	20 most recent alarm events. Each event contains 1 byte for each zone. Each zone Byte is defined as 0=No Alarm, 1=Leak Alarm, 2=Spill Alarm, 3=Evac Alarm.
Time	TIM	260 bytes	Time of each alarm event. TIM value as defined in NOTE 2 of Zone Data
Ptr	UC	1 byte	Pointer to most recent event
Unused	UC	1 byte	Unused

Service Mode Register 0x001B (27 Dec) (W, 10B)

Variable	Type	Length	Description
Rel_Svc_Mode	*	*	See description of STATUS REGISTER

Release Service Mode 0x001C (28 Dec) (W, 10B)

Variable	Type	Length	Description
Ent_Svc_Mode	*	*	See description of STATUS REGISTER

MZ Service Mode

The MZ monitor can be placed into service mode if necessary. During service mode the unit will take no measurements, any and all alarms are silenced, and all relays are opened. The unit automatically comes out of service mode after a preset interval defined by the service_mode_TO parameter in the System Data Register.

Placing the unit into Service Mode:

1. Read the MZ Status Register (0x0011h).
2. Modify the content of the status register structure to change the MODE parameter to service mode.
3. Send this updated status register structure back to the MZ unit using PRESET MULTIPLE REGISTER COMMAND to the SERVICE MODE REGISTER (0x001Bh).

Releasing the unit from Service Mode:

1. Read the MZ Status Register (0x0011h).
2. Modify the content of the status register to change the MODE parameter to normal mode.
3. Send this updated status register structure back to the MZ unit using PRESET MULTIPLE REGISTER COMMAND to the RELEASE SERVICE MODE REGISTER (0x001Ch).

PPM Register 0x001E (30 Dec) (R, 32B)

Variable	Type	Length	Description
PPM	UI	32 bytes	16 Unsigned Integers that represent the PPM values for each MZ monitor zone

NOTE: 16 values are returned independent of the number of actual zones installed in the unit. The master device is required to know how many zones are installed in the unit (available in the System Register) in order to properly interpret the data.

Zone Log Registers 0x3xyy (R, 1502B)

These registers are used to transfer the zone log data. Each zone has a circular log of 100 past data points. The period between data points is defined by the Log Interval parameter in each corresponding Zone Data Register. The data for each zone is defined by the “x” place in the above register address. For zone 1 the Register address is 0x30yyh, for zone 2 the register address is 0x31yyh, etc. The data for each zone is sent in 8 consecutive registers due to MODBUS RTU message length constrains. The addresses are defined by the “yy” place in the above address. For zone 1, all log data can be obtained by reading 0x3000h, 0x3001h, 0x3002h, …… , 0x3007h. The first seven registers contain 200 bytes each and the last register contains 102 bytes. After all registers have been received the data should be reassembled into the full data structure.

Variable	Type	Length	Description
Index	UI	2 bytes	Point to current reading
Time	TIM	1300 bytes	Time record for each of the 100 log points. The format for the TIM type is defined in note 2 of zone data
PPM	UI	200 bytes	Last 100 log points (2 byes per point)

Appendix 3 System Menu Map

Multizone System Map

Sample Setup Screens

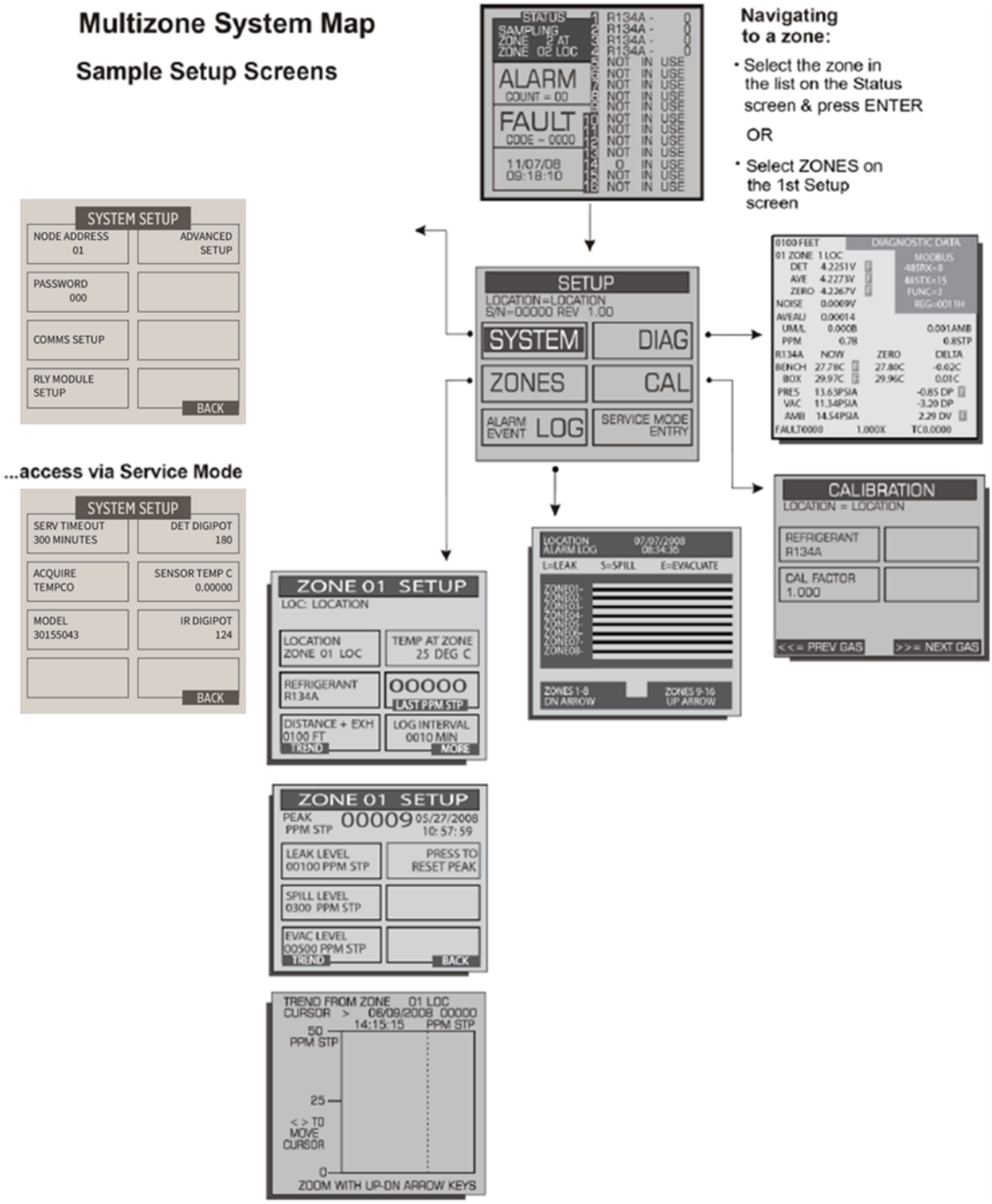

MultiZone System Map

Sample Alarm & Fault Screens

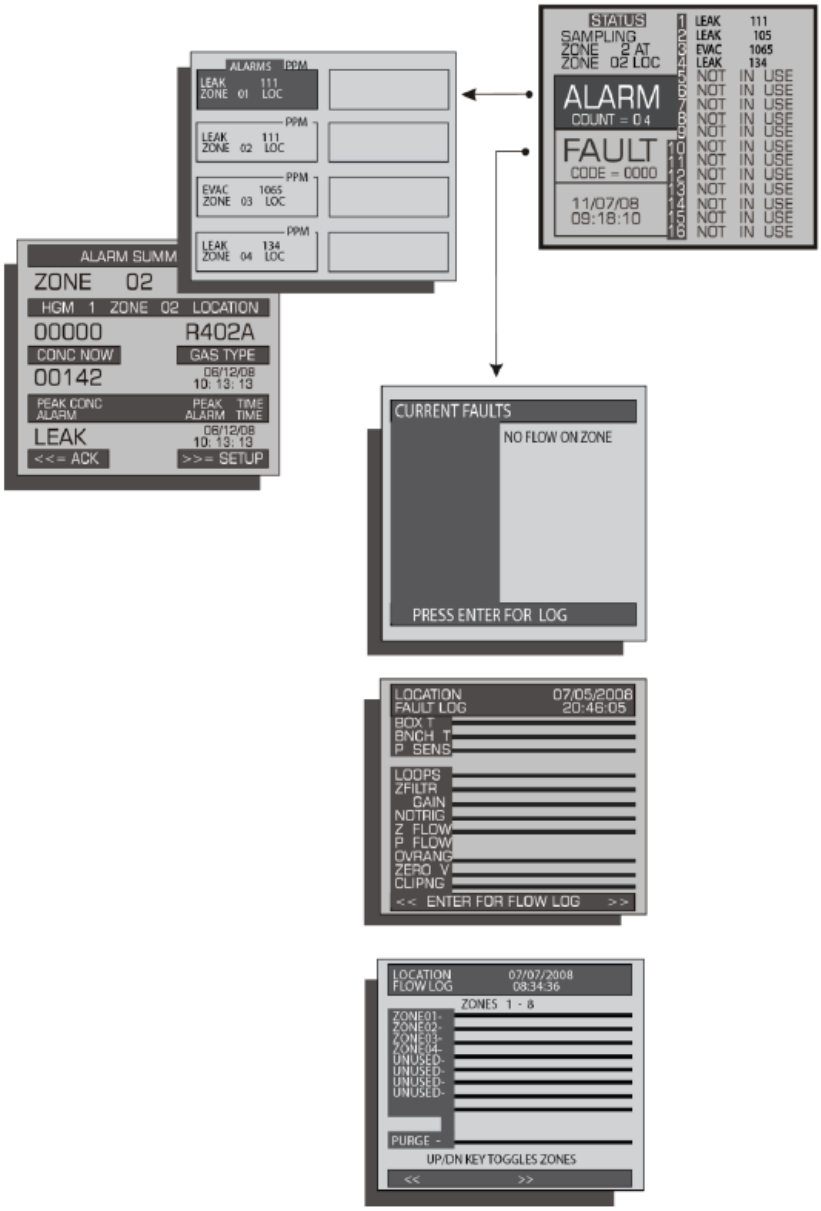

Navigating to a zone:

- Select the zone in the list on the Status screen & press ENTER

OR

- Select ZONES on the 1st Setup screen

Appendix 4 Contact Information

Service Centers	Support Centers
United States **MSA Bacharach** 621 Hunt Valley Circle New Kensington, PA 15068 Phone 724-334-5051 Fax: 724-334-5723 Email: help@mybacharach.com	**US Support** **MSA Bacharach** Pittsburgh, PA Phone: (800) 736-4666 Email: bacharach.help@MSAsafety.com
Canada **MSA Bacharach** 20 Amber Street Unit #7 Markham, Ontario L3R 5P4 Canada Phone: 905-470-8985 Fax: 905-470-8963 Email: support@bachcan.ca	**Canadian Support** **MSA Bacharach** Richmond Hill, Ontario Phone: (800) 328-5217 Email: BachCan.support@MSAsafety.com
Europe **MSA Bacharach** Unit D12 & D13 Santry Business Park Swords Road Santry, Dublin, Ireland Phone: +353 1 284 6388 Fax: +353 1 284 6389 Email: eutechnical@mybacharach.com Email: eusales@mybacharach.com	**European Support** **MSA Bacharach** Dublin, Ireland Phone: +353 284 6388 Email: Bacharach-SupportUK@MSASafety.com

APL ASIA CO., LTD. Authorized Distributor
Address: 11/129-132 Moo.5 Lamlukka Rd.,
T.Kookut, A.Lamlukka, Pathumthani 12130 Thailand.
TEL: 0-2995-4461-4
Website: www.apl-asia.com
EMAIL: sales@apl-asia.com
LINE@: @APL-ASIA