CENTER® 530 LIGHT METER

Instruction Manual

CENTER TECHNOLOGY CORP.

4F, NO. 415, Jung-Jeng Rd., Shu-Lin Dist., New Taipei City 238, Taiwan

E-Mail:center@centertek.com

http://www.centertek.com

GCA000530-22000

Safety Information

Read the following safety information carefully before attempting to operate or service the meter.

Use the meter only as specified in this manual ; otherwise, the protection provided by the meter may be impaired.

Environment Conditions:

- Altitude up to 2000 meters
- Relatively humidity 90% max.
- Operation Ambient 0 ~ 40°C

Explanation of Symbols:

CE Comply with EMC.
When servicing, use only specified replacement parts.

Introduction

Thank you for using our Light Meter. To ensure that you can get the most from it, we recommend that you read and follow the manual carefully before use. The Light Meter has been designed, manufactured, and delivered under strict quality control criteria by a factory certified. This meter has the following characteristic.

- Easy to use
- Automatic zero
- Automatic ranging
- MAX/MIN function
- Large backlight LCD display

Precautions on handling

Operating carefully, and do not drop the meter or hit it with a hard object. Avoid using the meter in a dirty, dusty, or salt-air area or where there are corrosive gases. If dirt or dust adhered to the surface of the detecting light, will decrease accuracy of the measuring value to clean the surface by wiping with a soft and dry cloth.

Specifications

Measuring level range:	0.0 to 199.9/1999/19990/199900 lx 0.0 to 19.9/199.9/1999/19990 fc Automatic or manual selection of range
Resolution:	0.1 ~ 100 lx, 0.1 ~ 10 fc
Accuracy:	±3% (Calibrated to standard incandescent lamp 2856°K) 8% other visible light source
Angle deviation from cosine characteristics	10° ± 1% 30° ± 2% 60° ± 5% 80° ± 20%
Temperature characteristics:	±0.1% / °C(25°C)
Response time:	0.5 sec
Light detector:	SI Photodiode
Over range:	"-OL-" display
Power supply:	1.5V type AA battery x2
Power life:	Approx. 80 hours
Operation temperature:	0°C ~ 40°C(32°F ~ 104°F)
Operation humidity:	0~80% RH
Storage Temperature:	-10 to 50°C (14 to 122°F)
Storage Humidity:	0 to 60% RH
Dimension / Weight:	169(L)×63(W)×37(H)mm (6.7"×2.5"×1.5")
Weight:	Approx. 185g
Accessories:	Battery, instruction manual, carrying case.

[Note] 1fc =10.76lx

Maintenance

Attention!

Repairs or servicing not covered in this manual should only be performed by qualified personal.

Cleaning

Periodically wipe the case with a dry cloth. Do not use abrasives or solvents on this instrument.

Note

If it is not used for a long time, please store the meter in chamber under 60%RH.

Symbol Definition & Button Location

1. LCD Display:

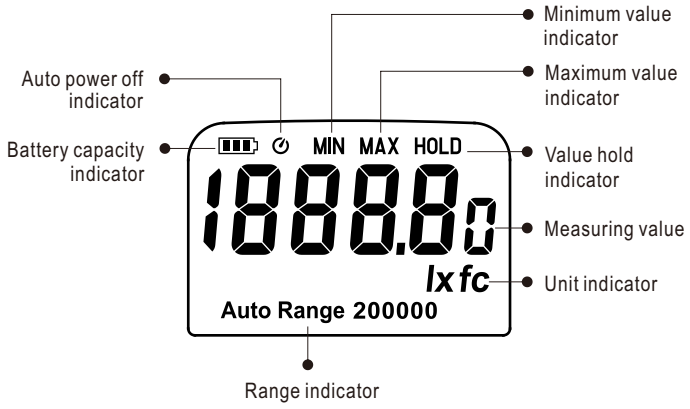

2. Name of Parts & Position:

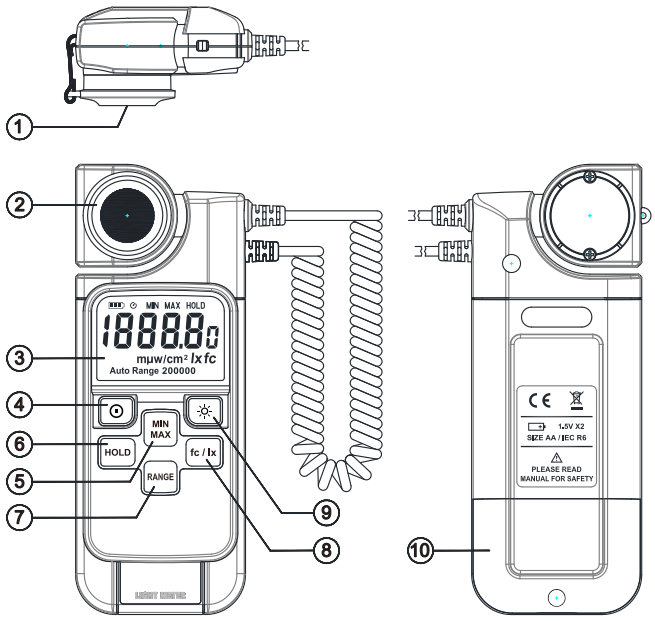

*** Operation**:

Press the power button to turn on the power. Notice that covering the light-detecting surface with the cap. "**CAP-**" will auto-appear on the LCD display. After "**CAL-**" appears, the meter enters the automatic zero adjustment. When automatic zero adjustment is completed, "**CAL-**" disappears and "**0.0**" appears. After confirming the "**0.0**" display, remove the cap to start measuring.

After the measurement has been completed, press the power button again to turn off the power, and cover the light-detecting surface with the cap for protecting against stray light.

Note:

If "ERR1" appears, check the cap to make sure it is on properly.

① **Sensor Cap :**

This parts is to protect the sensor from scratching and create complete dark environment for the meter to perform dark current calibration. During power on process, this cover should be set properly on the sensor otherwise an error message will be shown on the LCD.

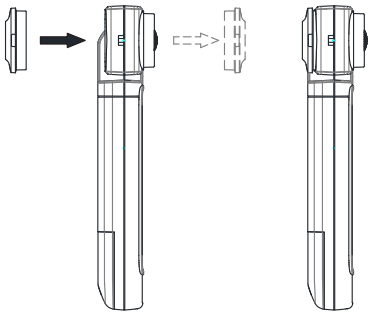

② **Light Sensing Probe**:

- This probe can be rotated various angles to the LCD surface to suit the measuring requirement.

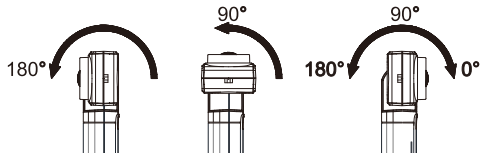

- It can be also detached from the meter to measure in distance, which creates more flexibility.

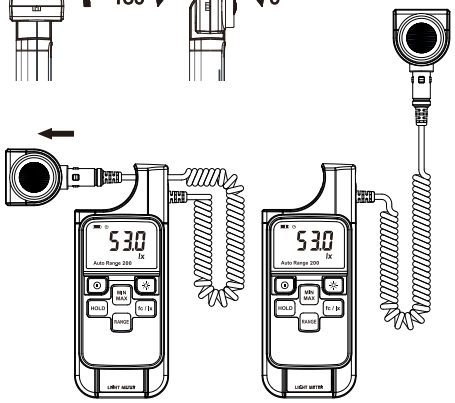

③ **LCD display**:

6 1/2" large size back light LCD display.

④ **Power button**:

Press [⏻] button to turn on the meter and it will automatically turn itself off 30 minutes after its last key operation. The user may disable this automatic power off function by pressing and holding " [HOLD] " button while powering on. The " ⏻ " symbol will disappear to confirm this operation.

Press [⏻] button again to turn the meter off.

⑤ **Max Min button**:

Press [MIN MAX] button to set the meter working under MAX/MIN mode. By pressing [MIN MAX] button, the user may swap the LCD reading among maximum, minimum and current reading. Press and hold [MIN MAX] button for 3 seconds to exit Max/Min mode.

⑥ **HOLD button**:

The user may hold the present reading and keep it on the LCD display by pressing the [HOLD] button. To release the held data operation, press the button again.

⑦ **Range selector button**:

The user may use the [RANGE] button to select the preferred measuring range or automatically selected by the meter.

The available ranges are:

AUTO, 200, 2000, 20000, 200000 lx

AUTO, 20, 200, 2000, 20000 fc

⑧ **Fc/lx selector button**:

Press [fc/lx] button to switch the measuring unit between Foot Candle and Lux.

⑨ **Backlight button**:

Press [☼] button to turn on the LCD back light and it will be automatically off after 30 seconds.

⑩ **Battery cabinet cover**:

When battery capacity segment is less than one, the user should replace the battery. The battery cabinet cover can be opened with a Philips screw driver and two AA type batteries should be installed.

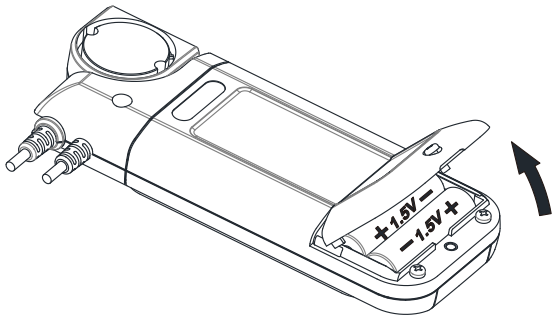

Characteristics of Sensor spectrum response

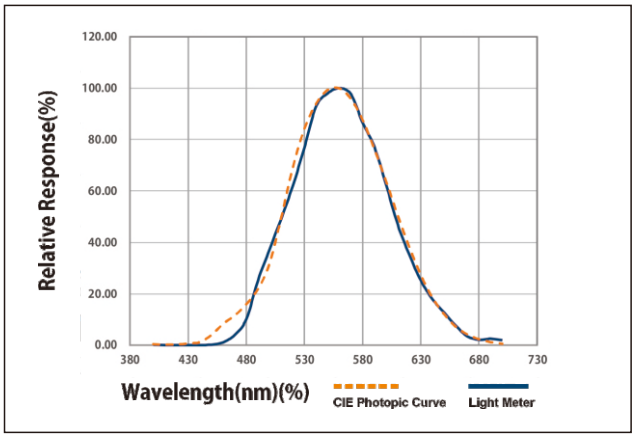

Authorized Distributor
APL ASIA CO., LTD.
11/129-132 Moo.5 Lamlukka Rd.,T.Kookut, A.Lamlukka, Pathumthani 12130 Thailand.
TEL. 0-2995-4461-4
www.apl-asia.com
EMAIL : sales@apl-asia.com
LINE@ : @APL-ASIA