IP66 | 4-20 mA 0-10 V | RS485 Modbus

Combustible Gases Detector-Transmitter E2648-LEL

Features

- Accurate and stable measurement
- Industrial IP66 wall mount housing
- Two analog outputs settable to 4-20 mA or 0-10 V
- RS485 Modbus RTU digital interface
- Two relays for alarm / ventilation control (option)
- Attached or remote sensor

Specifications

Detected gases	Hydrogen, methane, acetylene, propane, butane, hexane, octane	
Default calibration	Methane CH_4	
Sensor type	Metal-oxide semiconductor pellistor (catalytic bead) on demand	
Sampling method	Diffusion	
Sensor	MOS	pellistor
Typical detection range	0...100% LEL	0...100% LEL
Resolution	0.1% LEL	1% LEL
Response time T90	ca. 60 s	≤10 s
Sensor lifetime	> 5 years	> 3 years
Maintenance interval	12 months	6 months
Operating temperature	-40...+70 °C	-10...+50°C
Signal update	Every 1 second	
Self-diagnostics	Full functionality check at start-up	
Warm-up time	≤ 1 min	
Power supply	12...36 VDC (default) 24 VAC or 230 VAC as options	
Power consumption	< 2 VA	
Digital interface	RS485, Modbus RTU protocol	
Analog outputs	2 × 4-20 mA / 0-10 V, user settable	
Output scale width	Recommended: 20-100% of the range; > 10 × resolution in any case	
Enclosure	Die-cast aluminium, wall mount, protection class IP66	
Dimensions	H120 × W125 × D57 mm	
Operating environment	Industrial indoor and outdoor locations	
Operating conditions	(operating temperature is specified above) <95% RH non condensing; 0.9...1,1 atm Explosion-safe areas; normal ambient O_2 level Avoid exposure to corrosive gases or silicone containing products	

Dimensions

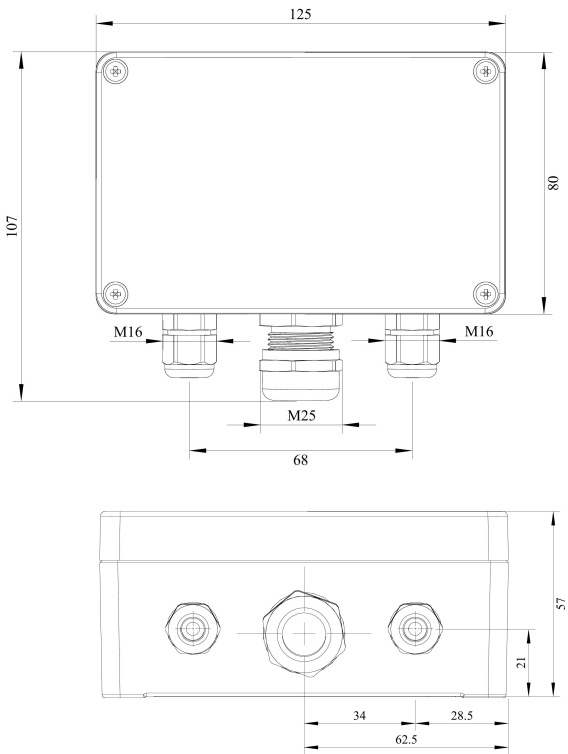

Relay option (ordering code R)

Output relays	2 × SPST relays (closing contact), 250 VAC / 30 VDC, 5 A max
Default alarm setpoints	LOW: set 20 %LEL, release 16% LEL; HIGH:set 50%LEL, release 40% LEL

Other options

Remote sensor probe	Protection IP65, shielded cable default cable length 3.0 m

Ask for other versions or custom designed products

Connection diagrams

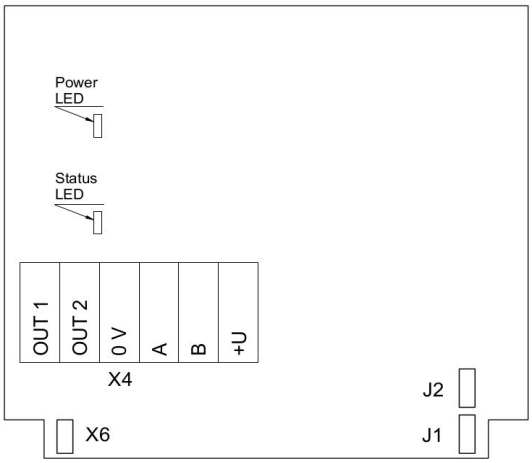

Version without PSU and relays

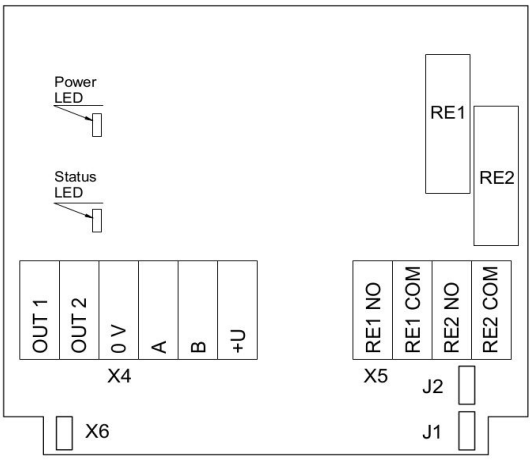

Version without PSU and with relays

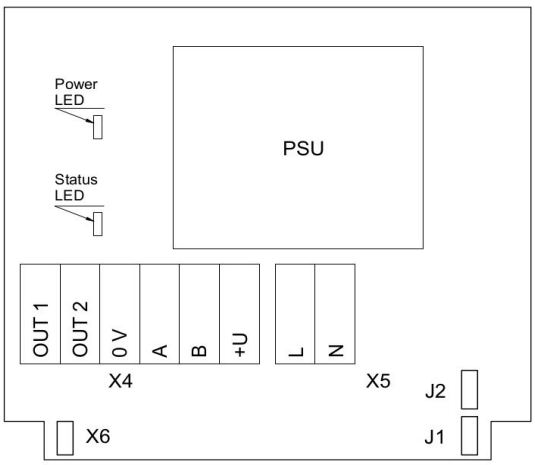

Version with PSU and without relays

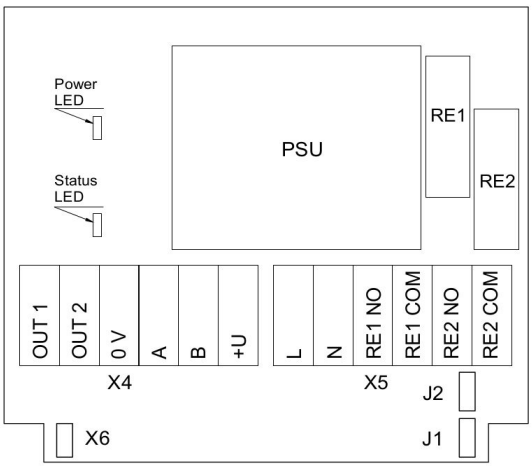

Version with PSU and relays

Jumpers

J1	OUT1 type (open: 4-20 mA; closed 0-10 V)
J2	OUT2 type (open: 4-20 mA; closed 0-10 V)
X6	Reset Modbus network parameters to default
X4 terminals	
OUT1	4-20 mA / 0-10 V output
OUT2	4-20 mA / 0-10 V output
0V	0 V / 24 VAC Neutral (optional)
A	RS485 A / Data +
B	RS485 B / Data -
+U	+24 VDC / 24 VAC Phase (optional)
X5 terminals (optional)	
L	90…265 VAC Phase
N	90…265 VAC Neutral
RE1 NO	Relay 1, normally open terminal
RE1 COM	Relay 1, common terminal
RE2 NO	Relay 2, normally open terminal
RE2 COM	Relay 2, common terminal

Remote probe

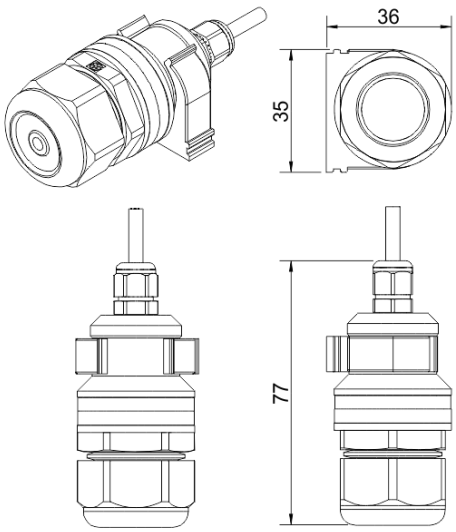

A

Wall mount remote probe with fixing clamp (default version)

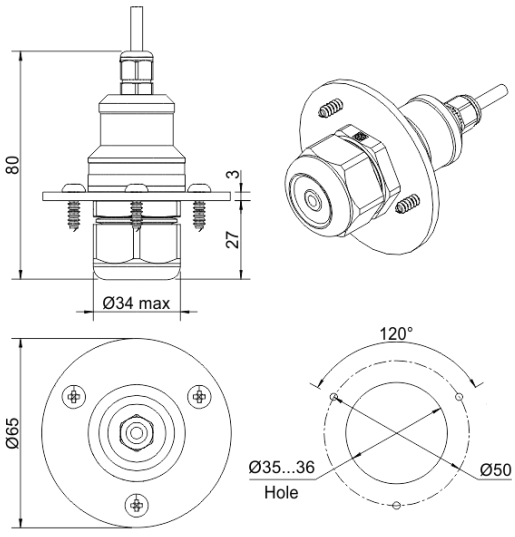

B

Remote probe with rubber flange and three self-tapping screws (on request)

Authorized Distributor
APL ASIA CO., LTD.
11/129-132 Moo.5 Lamlukka Rd.,T.Kookut, A.Lamlukka, Pathumthani 12130 Thailand.
TEL. 0-2995-4461-4 www.apl-asia.com EMAIL : sales@apl-asia.com LINE@ : @APL-ASIA