IP66 | 4-20 mA 0-10 V | RS485 Modbus

Ammonia Detector-Transmitter E2648-NH3-E

Features

- Accurate and stable measurement
- Industrial IP66 wall mount housing
- Two analog outputs settable to 4-20 mA or 0-10 V
- RS485 Modbus RTU digital interface
- Two relays for alarm / ventilation control (option)
- Attached or remote sensor

Specifications

Calibration	Ammonia NH_3		
Sensor type	Electrochemical		
Sampling method	Diffusion		
Typical detection ranges	0...100 ppm	0...300 ppm	0...1000 ppm
Maximum overload	200 ppm	500 ppm	1500 ppm
Resolution	1 ppm	1 ppm	1 ppm
Response time T90	<75 s		
Sensor lifetime	> 2 years		
Maintenance interval	6 months		
Signal update	Every 1 second		
Self-diagnostics	Full functionality check at start-up		
Warm-up time	≤ 1 min		
Power supply	12...36 VDC (default) 24 VAC or 230 VAC as options		
Power consumption	< 2 VA		
Digital interface	RS485, Modbus RTU protocol		
Analog outputs	2 × 4-20 mA / 0-10 V, user settable		
Output scale width	Recommended: 20-100% of the range; > 10 × resolution in any case		
Enclosure	Die-cast aluminium, wall mount, protection class IP66		
Dimensions	H120 × W125 × D57 mm		
Operating environment	Industrial indoor and outdoor locations		
Operating conditions	-40...+50°C, 15...90 %RH non-condensing; 0,9...1,1 atm; explosion safe areas; Non-aggressive atmosphere **NOTE!** The device is not suitable for areas with constantly high ammonia concentration. **NOTE!** We offer technical solutions for extreme humidity, please ask for more information		
Relay option (ordering code R)			
Output relays	2 × SPST relays (closing contact), 250 VAC / 30 VDC, 5 A max		
Default alarm setpoints	For 0...100 ppm range: RE1 (LOW): set 25; release 20 ppm RE2 (HIGH): set 35; release 28 ppm For other ranges: defined by user within 5-95% of the detection range		
Other options			
Remote sensor probe	Protection IP65, shielded cable default cable length 3.0 m		

Dimensions

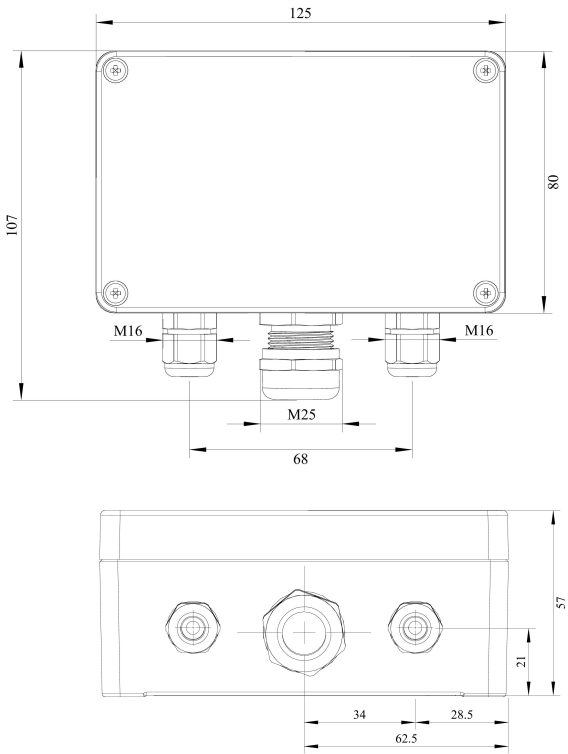

Ask for other versions or custom designed products

Connection diagrams

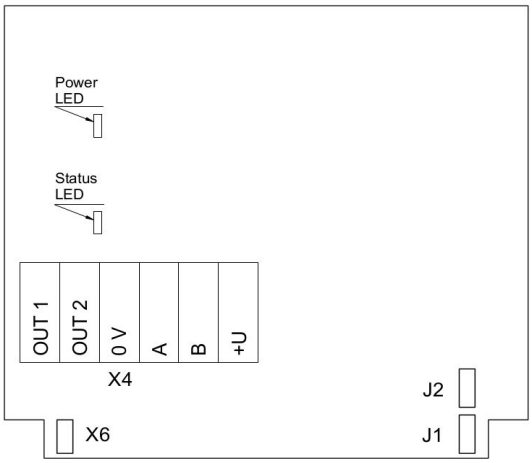

Version without PSU and relays

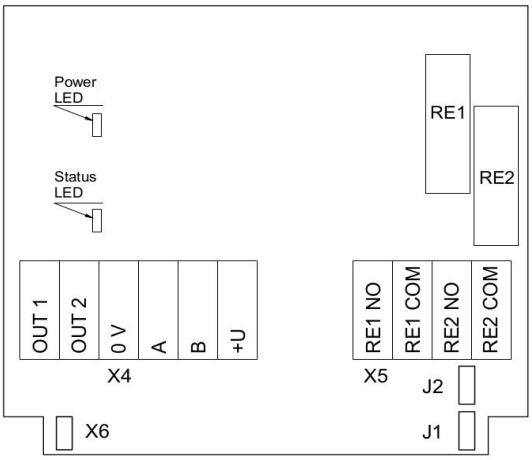

Version without PSU and with relays

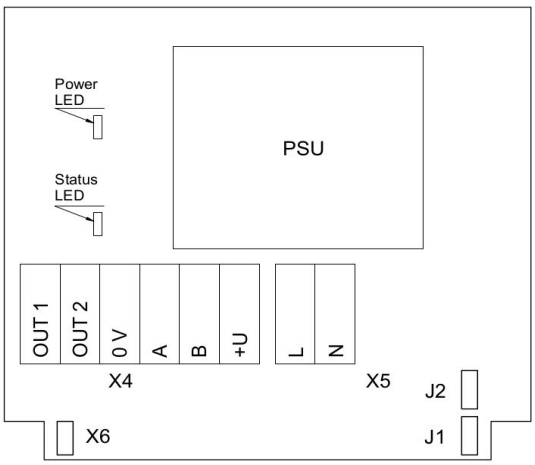

Version with PSU and without relays

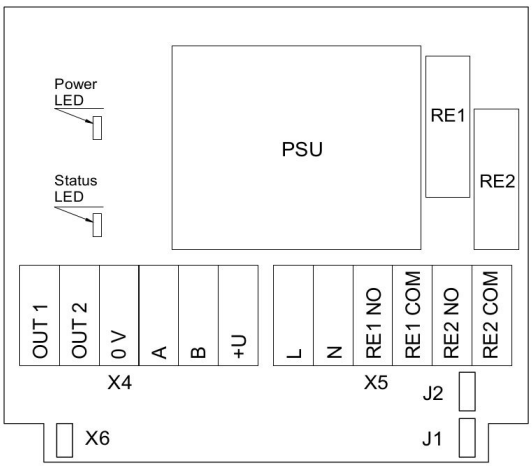

Version with PSU and relays

Jumpers	
J1	OUT1 type (open: 4-20 mA; closed 0-10 V)
J2	OUT2 type (open: 4-20 mA; closed 0-10 V)
X6	Reset Modbus network parameters to default
X4 terminals	
OUT1	4-20 mA / 0-10 V output
OUT2	4-20 mA / 0-10 V output
0V	0 V / 24 VAC Neutral (optional)
A	RS485 A / Data +
B	RS485 B / Data -
+U	+24 VDC / 24 VAC Phase (optional)
X5 terminals (optional)	
L	90…265 VAC Phase
N	90…265 VAC Neutral
RE1 NO	Relay 1, normally open terminal
RE1 COM	Relay 1, common terminal
RE2 NO	Relay 2, normally open terminal
RE2 COM	Relay 2, common terminal

Remote probe

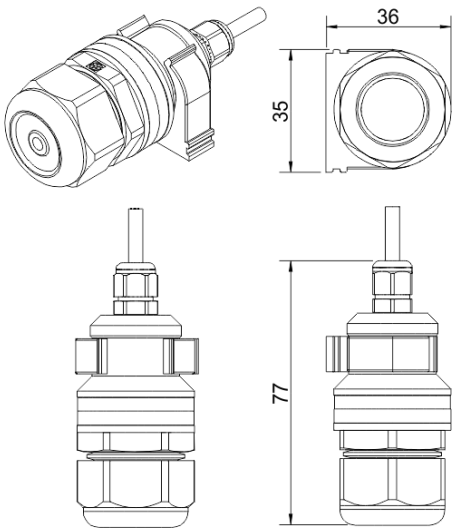

A

Wall mount remote probe with fixing clamp (default version)

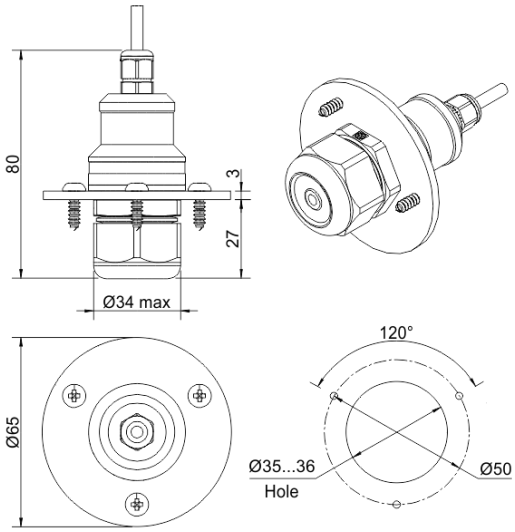

B

Remote probe with rubber flange and three self-tapping screws (on request)

Authorized Distributor
APL ASIA CO., LTD.
11/129-132 Moo.5 Lamlukka Rd.,T.Kookut, A.Lamlukka, Pathumthani 12130 Thailand.
TEL. 0-2995-4461-4 www.apl-asia.com EMAIL : sales@apl-asia.com LINE@ : @APL-ASIA