IP66 | 4-20 mA 0-10 V | RS485 Modbus

Ammonia Detector-Transmitter
E2648-NH3-P

Features

- Accurate and stable measurement
- Industrial IP66 wall mount housing
- Two analog outputs settable to 4-20 mA or 0-10 V
- RS485 Modbus RTU digital interface
- Two relays for alarm / ventilation control (option)
- Attached or remote sensor

Specifications

Calibration	Ammonia NH_3
Sensor type	Pellistor (catalytic bead)
Sampling method	Diffusion
Typical detection range	0...15%vol. (0…100%LEL NH_3)
Resolution	0.1%vol. or 1%LEL
Response time T90	≤10 s
Sensor lifetime	> 3 years
Maintenance interval	6 months
Operating temperature	-20...+60 °C
Signal update	Every 1 second
Self-diagnostics	Full functionality check at start-up
Warm-up time	≤ 1 min
Power supply options	12...36 VDC (default) 24 VAC or 230 VAC as options
Power consumption	< 2 VA
Digital interface	RS485, Modbus RTU protocol
Analog outputs	2 × 4-20 mA / 0-10 V, user settable
Output scale width	Recommended: 20-100% of the range; > 10 × resolution in any case Analog output scale can be set according to customer's requirement (e.g. 0…4%vol. NH_3)
Enclosure	Die-cast aluminium, wall mount, protection class IP66
Dimensions	H120 × W125 × D57 mm
Operating environment	Industrial indoor and outdoor locations
Operating conditions	(operating temperature is specified above) <95% RH non condensing; 0.9...1,1 atm Explosion-safe areas; normal ambient O_2 level Avoid exposure to corrosive gases or silicone containing products

Relay option (ordering code R)

Output relays	2 × SPST relays (closing contact), 250 VAC / 30 VDC, 5 A max

Other options

Remote sensor probe	Protection IP65, shielded cable default cable length 3.0 m

Dimensions

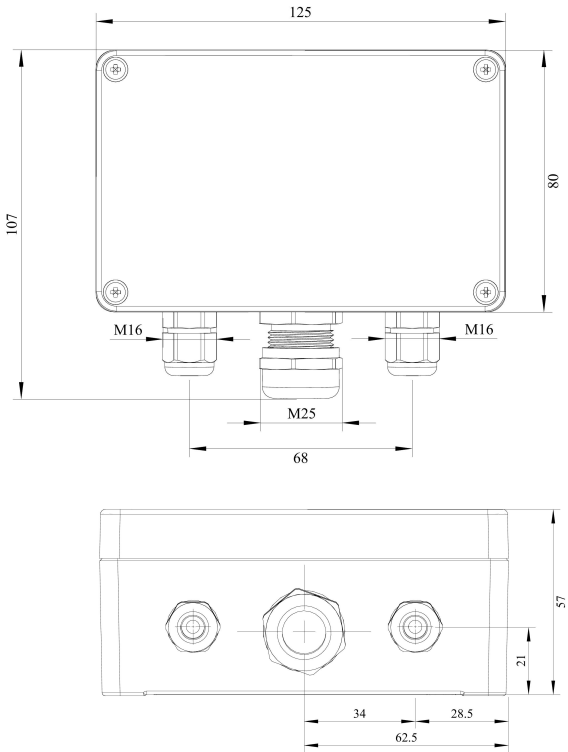

Ask for other versions or custom designed products

Connection diagrams

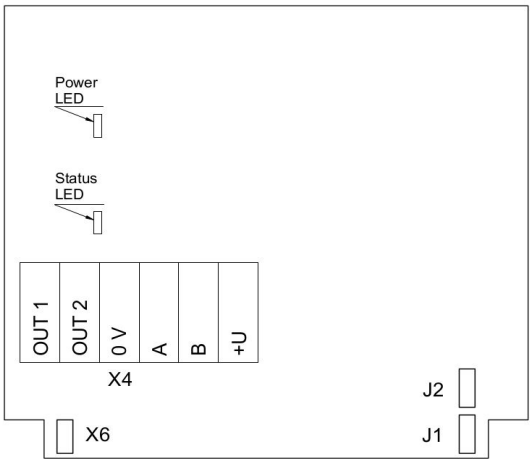

Version without PSU and relays

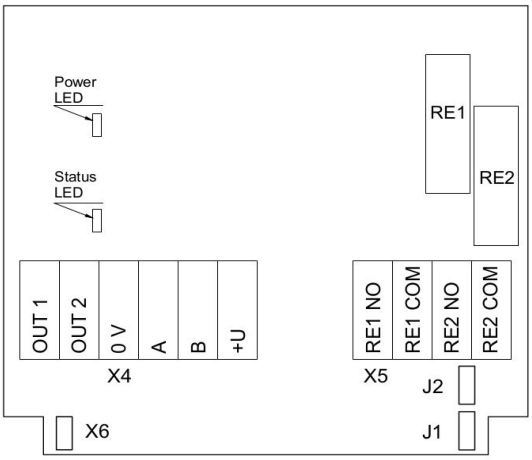

Version without PSU and with relays

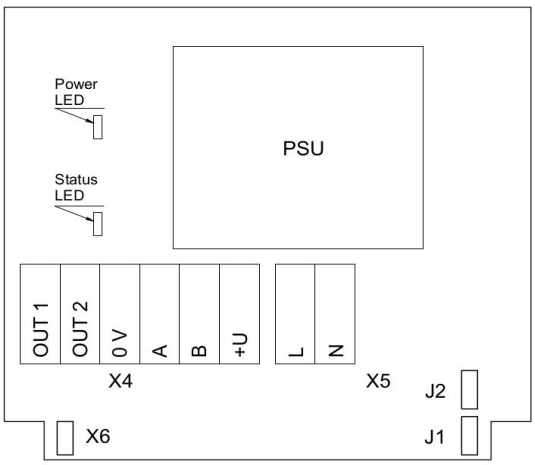

Version with PSU and without relays

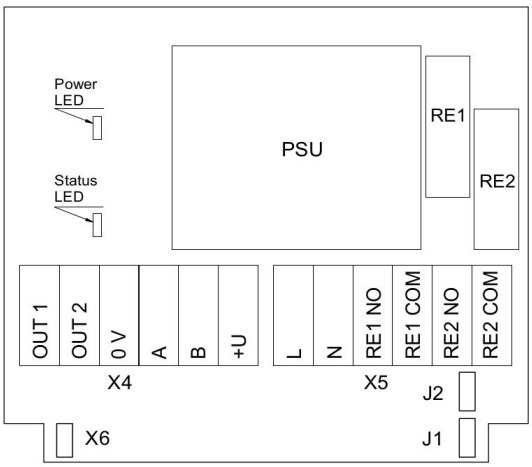

Version with PSU and relays

Jumpers	
J1	OUT1 type (open: 4-20 mA; closed 0-10 V)
J2	OUT2 type (open: 4-20 mA; closed 0-10 V)
X6	Reset Modbus network parameters to default
X4 terminals	
OUT1	4-20 mA / 0-10 V output
OUT2	4-20 mA / 0-10 V output
0V	0 V / 24 VAC Neutral (optional)
A	RS485 A / Data +
B	RS485 B / Data -
+U	+24 VDC / 24 VAC Phase (optional)
X5 terminals (optional)	
L	90…265 VAC Phase
N	90…265 VAC Neutral
RE1 NO	Relay 1, normally open terminal
RE1 COM	Relay 1, common terminal
RE2 NO	Relay 2, normally open terminal
RE2 COM	Relay 2, common terminal

Remote probe

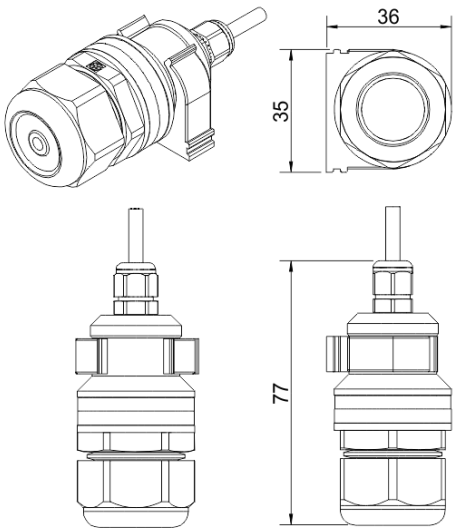

A

Wall mount remote probe with fixing clamp (default version)

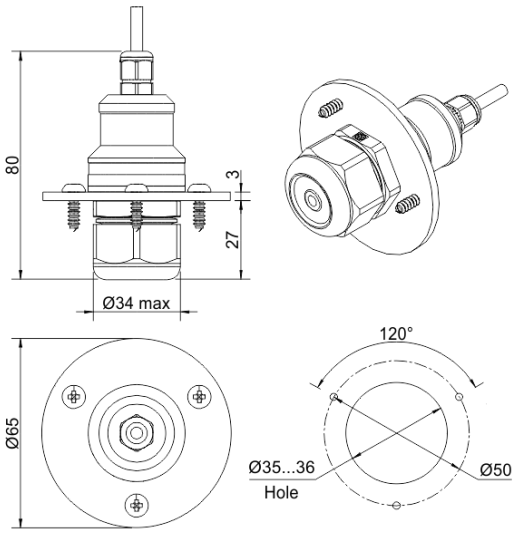

B

Remote probe with rubber flange and three self-tapping screws (on request)

Authorized Distributor
APL ASIA CO., LTD.
11/129-132 Moo.5 Lamlukka Rd.,T.Kookut, A.Lamlukka, Pathumthani 12130 Thailand.
TEL. 0-2995-4461-4 www.apl-asia.com EMAIL : sales@apl-asia.com LINE@ : @APL-ASIA