IP65 | 4-20 mA 0-10 V | RS485 Modbus

Dual Gas Transmitter
E2660-CO-CO2

Features

- CO and CO_2 monitoring in underground garages
- Two analog outputs 4-20 mA and 0-10 V
- RS485 Modbus RTU digital interface
- Wall mount IP65 protected housing
- Attached or remote sensor

Specifications

Calibration	Carbon monoxide CO Carbon dioxide CO_2
Sensors	CO: long-life electrochemical cell CO_2: photoacoustic sensor
Sampling method	Diffusion
Detection ranges	0...300 ppm, 0...1000 ppm CO 0...10 000 ppm CO_2 other ranges on request
Resolution	1 ppm CO 1 ppm CO_2
Response time	CO: T90 ≤ 30 s; CO_2: T60 ≤ 60 s
Signal update	Every 1 second for CO; every 5 seconds for CO_2
Maintenance interval	CO: 12 months CO_2: no field recalibration if ABC algorithm is enabled
Sensor lifetime	CO: > 10 years (replaceable) CO_2 : > 10 years (non-replaceable)
Self-diagnostics	Full functionality check at start-up
Warm-up time	≤ 1 min
Power supply	12 ... 36 VDC (default) 24 VAC or 230 VAC as options
Power consumption	< 2 VA
Digital interface	RS485, Modbus RTU protocol
Analog outputs	2 × 4-20 mA / 0-10 V, user settable
Output scale width	Recommended: 20-100% of the range; > 10 × resolution in any case
Enclosure	Grey ABS plastic, wall mount, protection class IP65
Dimensions	H90 × W145× D55 mm
Sensor heads	M25
Remote sensor probe	Protection IP65, shielded cable default cable length 3.0 m
Operating conditions	Explosion-safe areas; Non-aggressive atmosphere without condensation; 0,9...1,1 atm; -20...+50 °C, 15...90 %RH non condensing for CO -40...+60 °C, 0...100 %RH for CO_2 -**NOTE!** we offer technical solutions for extreme humidity, please contact us for details.

Dimensions

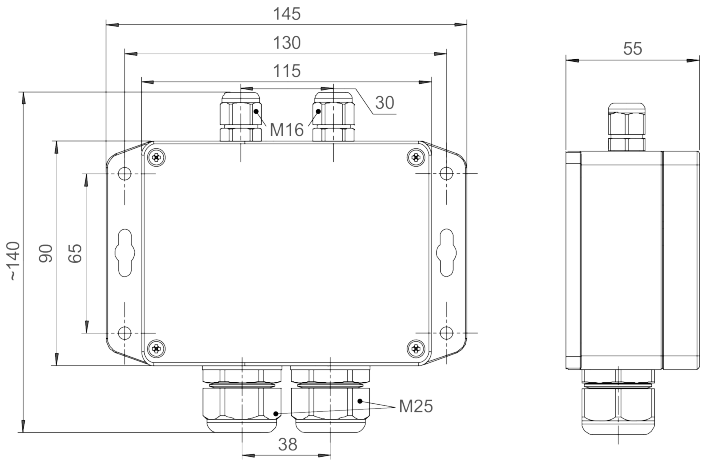

Ask for other versions or custom designed products

Connection diagram

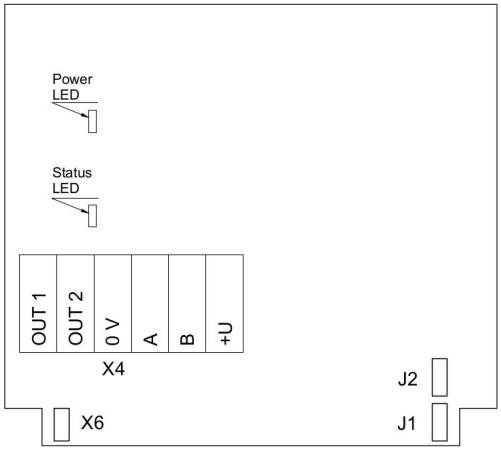

Version without PSU and relays

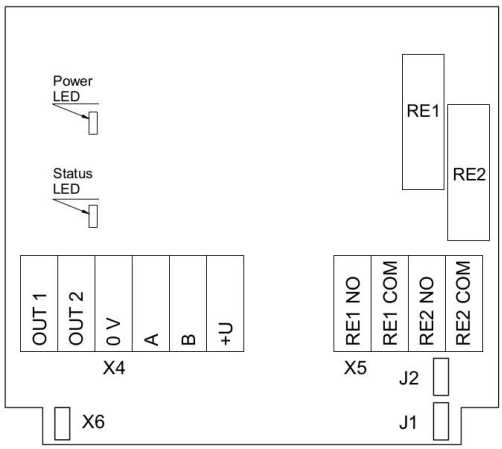

Version without PSU and with relays

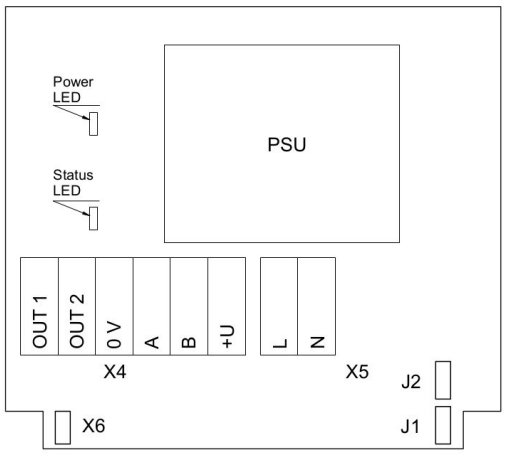

Version with PSU and without relays

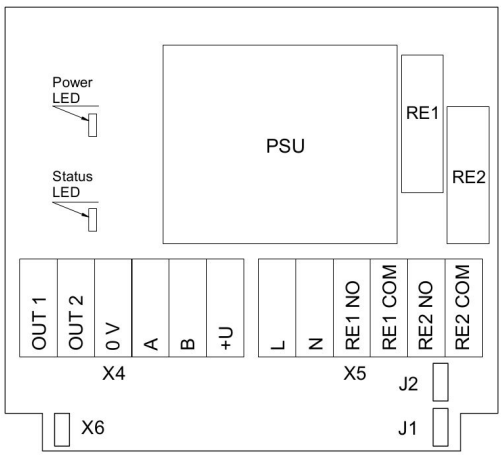

Version with PSU and relays

Jumpers

J1	OUT1 type (open: 4-20 mA; closed 0-10 V)
J2	OUT2 type (open: 4-20 mA; closed 0-10 V)
X6	Reset Modbus network parameters to default

X4 terminals

OUT1	4-20 mA / 0-10 V output
OUT2	4-20 mA / 0-10 V output
0V	0 V / 24 VAC Neutral (optional)
A	RS485 A / Data +
B	RS485 B / Data -
+U	+24 VDC / 24 VAC Phase (optional)

X5 terminals (optional)

L	90…265 VAC Phase
N	90…265 VAC Neutral
RE1 NO	Relay 1, normally open terminal
RE1 COM	Relay 1, common terminal
RE2 NO	Relay 2, normally open terminal
RE2 COM	Relay 2, common terminal

Remote probe

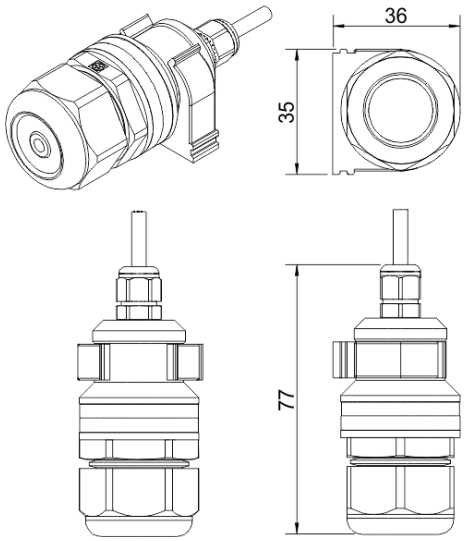

A

Wall mount remote probe with fixing clamp (default version)

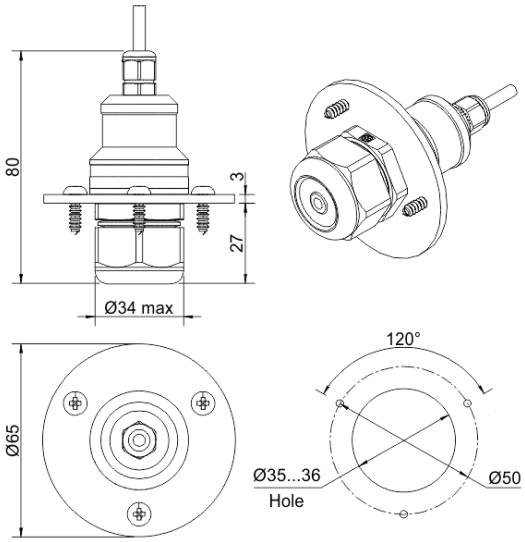

B

Remote probe with rubber flange and three self-tapping screws (on request)

Authorized Distributor
APL ASIA CO., LTD.
11/129-132 Moo.5 Lamlukka Rd.,T.Kookut, A.Lamlukka, Pathumthani 12130 Thailand.
TEL. 0-2995-4461-4 www.apl-asia.com EMAIL : sales@apl-asia.com LINE@ : @APL-ASIA