IP65 | 4-20 mA 0-10 V | RS485 Modbus

Dual Gas Transmitter
E2660-CO-NO

Features

- CO and NO monitoring in underground parking
- Two analog outputs 4-20 mA and 0-10 V
- RS485 Modbus RTU digital interface
- Wall mount IP65 protected housing
- Attached or remote sensor
- Relay option

Specifications

	CO	NO
Sensor type	Electrochemical	Electrochemical
Sampling method	Diffusion	Diffusion
Detection ranges	0-300, 0-1000 ppm	0...250 ppm
Max. overload	2000 ppm	1000 ppm
Resolution	1 ppm	1 ppm
Response time T90	ca. 30 s	<40 s
Maintenance interval	12 months	6 months
Sensor lifetime	> 10 years	> 12 months
Signal update	Every 1 second	
Self-diagnostics	Full functionality check at start-up	
Warm-up time	≤ 1 min	
Power supply	12 ... 36 VDC (default)	
	24 VAC or 230 VAC as options	
Power consumption	< 2 VA	
Digital interface	RS485, Modbus RTU protocol	
Analog outputs	2 × 4-20 mA / 0-10 V, user settable	
Output scale width	Recommended: 20-100% of the range; > 10 × resolution in any case	
Enclosure	Grey ABS plastic, wall mount, protection class IP65	
Dimensions	H90 × W145× D55 mm	
Sensor heads	M25	
Remote sensor probe	Protection IP65, shielded cable default cable length 3.0 m	
Operating conditions	Explosion-safe areas; Non-aggressive atmosphere without condensation; 0,9...1,1 atm; -20...+50 °C, 0...85 %RH	
	NOTE! we offer technical solutions for extreme humidity, please contact us for details.	

Relay option (ordering code R)

Output relays	2 × SPST relays (closing contact), 250 VAC / 30 VDC, 5 A max
Default alarm setpoints	RE1: set 25 ppm, release 20 ppm
	RE2: set 10 ppm, release 8 ppm

Dimensions

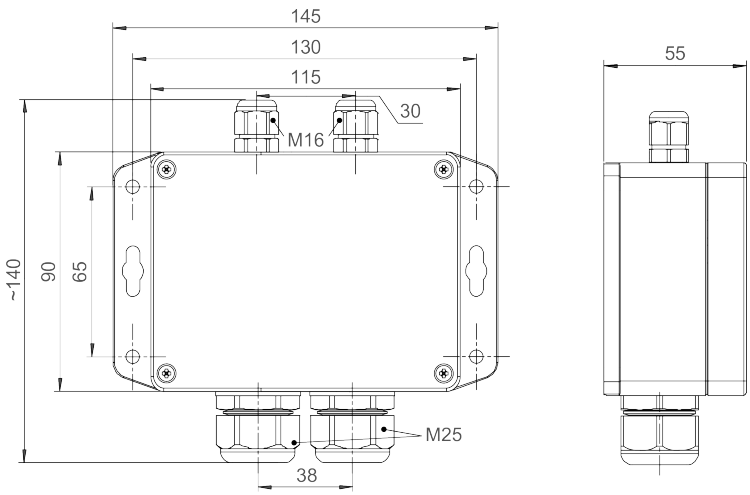

Ask for other versions or custom designed products

Connection diagram

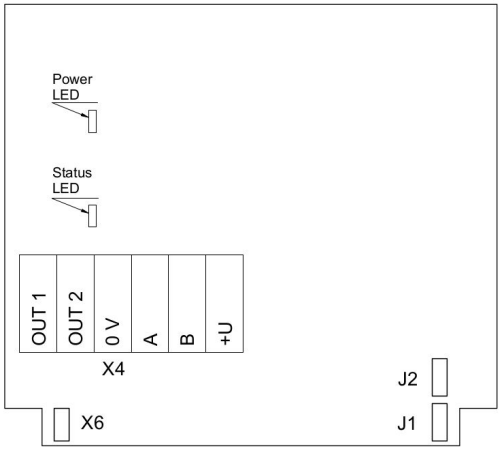

Version without PSU and relays

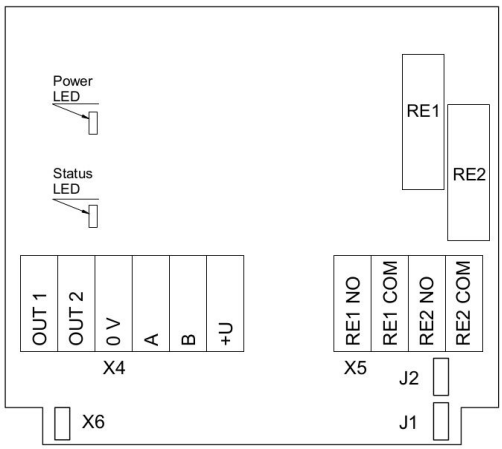

Version without PSU and with relays

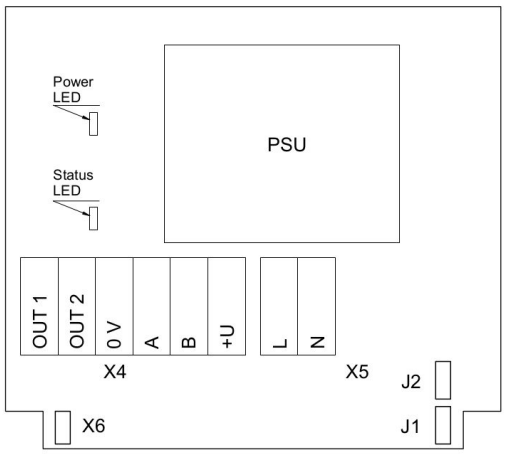

Version with PSU and without relays

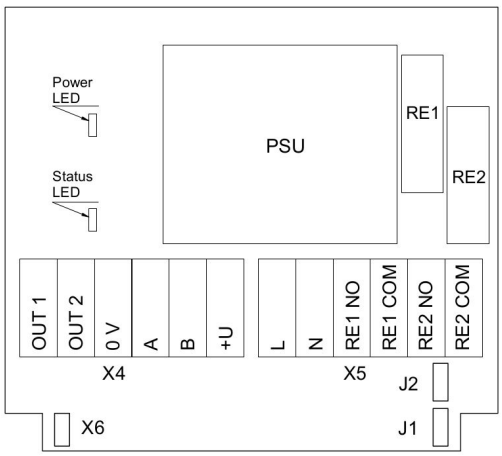

Version with PSU and relays

Jumpers

J1	OUT1 type (open: 4-20 mA; closed 0-10 V)
J2	OUT2 type (open: 4-20 mA; closed 0-10 V)
X6	Reset Modbus network parameters to default

X4 terminals

OUT1	4-20 mA / 0-10 V output
OUT2	4-20 mA / 0-10 V output
0V	0 V / 24 VAC Neutral (optional)
A	RS485 A / Data +
B	RS485 B / Data -
+U	+24 VDC / 24 VAC Phase (optional)

X5 terminals (optional)

L	90…265 VAC Phase
N	90…265 VAC Neutral
RE1 NO	Relay 1, normally open terminal
RE1 COM	Relay 1, common terminal
RE2 NO	Relay 2, normally open terminal
RE2 COM	Relay 2, common terminal

Remote probe

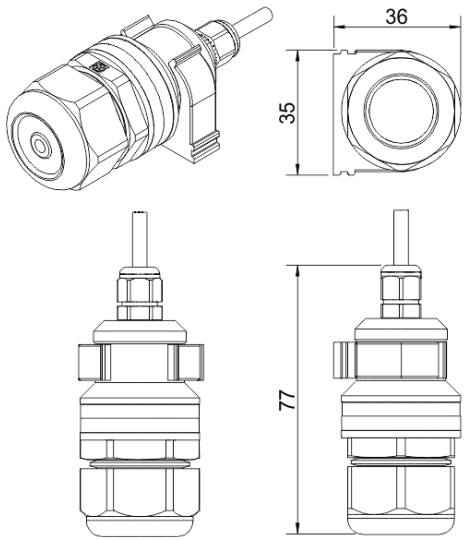

A

Wall mount remote probe with fixing clamp (default version)

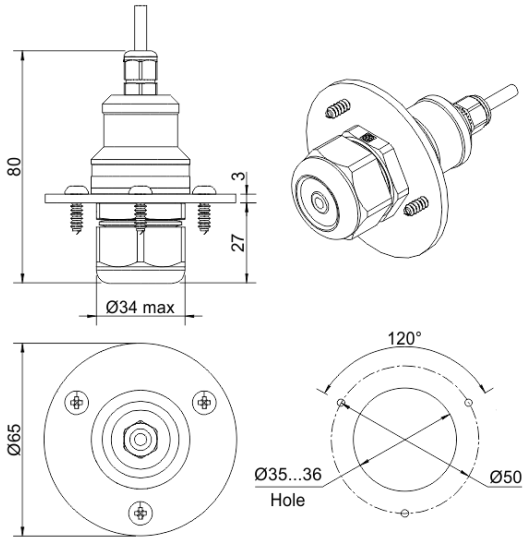

B

Remote probe with rubber flange and three self-tapping screws (on request)

Authorized Distributor
APL ASIA CO., LTD.
11/129-132 Moo.5 Lamlukka Rd.,T.Kookut, A.Lamlukka, Pathumthani 12130 Thailand.
TEL. 0-2995-4461-4 www.apl-asia.com EMAIL : sales@apl-asia.com LINE@ : @APL-ASIA