IP65 | 4-20 mA 0-10 V | RS485 Modbus

Dual Gas Transmitter
E2660-CO-NO2

Features

- CO and NO_2 detection in underground garages
- Two analog outputs 4-20 mA and 0-10 V
- RS485 Modbus RTU digital interface
- Wall mount IP65 protected housing

Specifications

	CO	NO_2	
Sensor type	Electrochemical	Electrochemical	
Sampling method	Diffusion	Diffusion	
Detection ranges	0...300 ppm / 0...1000 ppm	0...20 ppm / 0...200 ppm	
Max. overload	2000 ppm	100 ppm	1000 ppm
Resolution	1 ppm	0.1 ppm	1 ppm
Response time T90	ca. 30 s	< 60 s	<40 s
Maintenance interval	12 months	6 months	
Sensor lifetime	> 10 years	> 2 years	
Signal update	Every 1 second		
Self-diagnostics	Full functionality check at start-up		
Warm-up time	≤ 1 min		
Power supply	12 ... 36 VDC (default) 24 VAC or 230 VAC as options		
Power consumption	< 2 VA		
Digital interface	RS485, Modbus RTU protocol		
Analog outputs	2 × 4-20 mA / 0-10 V, user settable		
Output scale width	Recommended: 20-100% of the range; > 10 × resolution in any case		
Enclosure	Grey ABS plastic, wall mount, protection class IP65		
Dimensions	H90 × W145× D55 mm		
Sensor heads	M25		
Remote sensor probe	Protection IP65, shielded cable		
	default cable length 3.0 m		
	NOTE! Remote probe with an electrochemical sensor have to be installed in the same environmental conditions as the entire product to ensure correct measurements		
	*This rule does not apply to remote probes with other sensor types.		
	*This rule does not apply to electrochemical sensors, if sensor is attached (wall-mount version)		
Operating conditions	Explosion-safe areas; Non-aggressive atmosphere without condensation; 0,9...1,1 atm; -20...+50 °C, 0...85 %RH		
	NOTE! we offer technical solutions for extreme humidity, please contact us for details.		

Ask for other versions or custom designed products

Dimentions

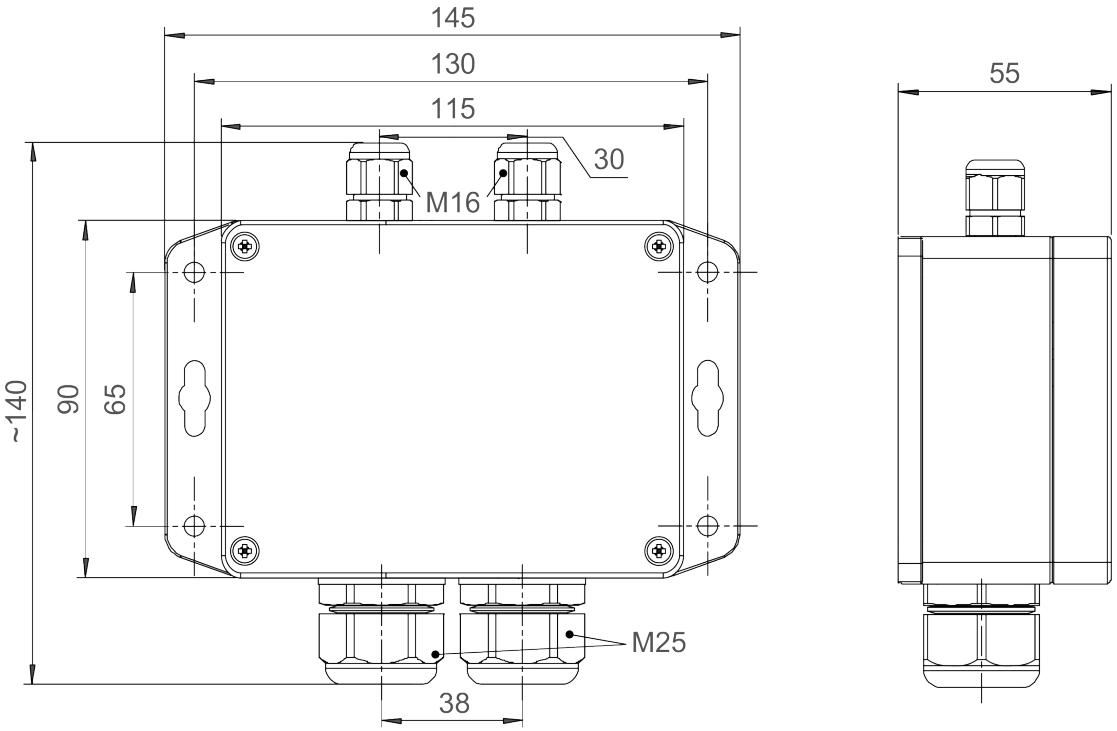

Connection diagram

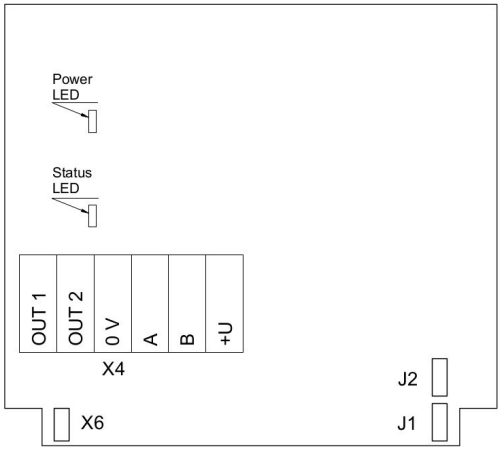

Version without PSU and relays

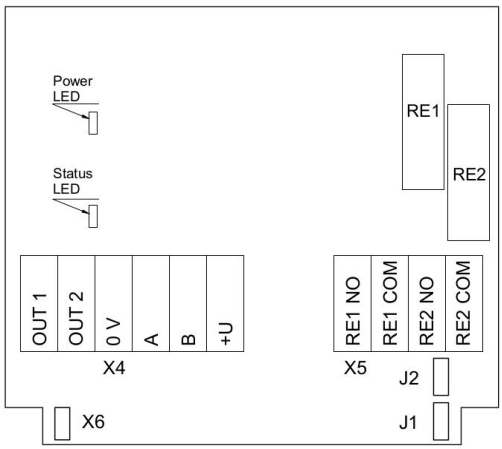

Version without PSU and with relays

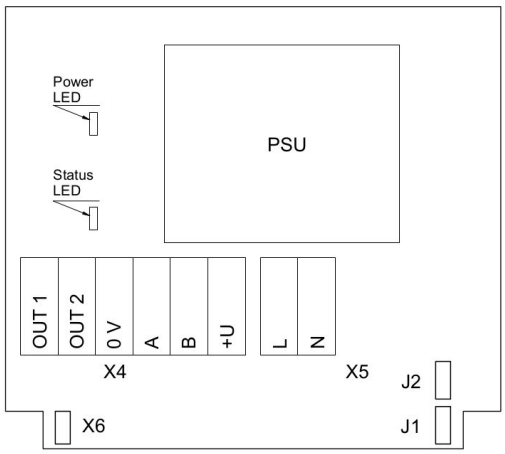

Version with PSU and without relays

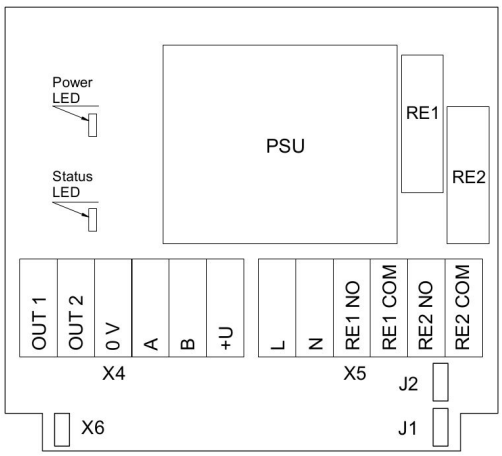

Version with PSU and relays

Jumpers

J1	OUT1 type (open: 4-20 mA; closed 0-10 V)
J2	OUT2 type (open: 4-20 mA; closed 0-10 V)
X6	Reset Modbus network parameters to default

X4 terminals

OUT1	4-20 mA / 0-10 V output
OUT2	4-20 mA / 0-10 V output
0V	0 V / 24 VAC Neutral (optional)
A	RS485 A / Data +
B	RS485 B / Data -
+U	+24 VDC / 24 VAC Phase (optional)

X5 terminals (optional)

L	90…265 VAC Phase
N	90…265 VAC Neutral
RE1 NO	Relay 1, normally open terminal
RE1 COM	Relay 1, common terminal
RE2 NO	Relay 2, normally open terminal
RE2 COM	Relay 2, common terminal

Remote probe

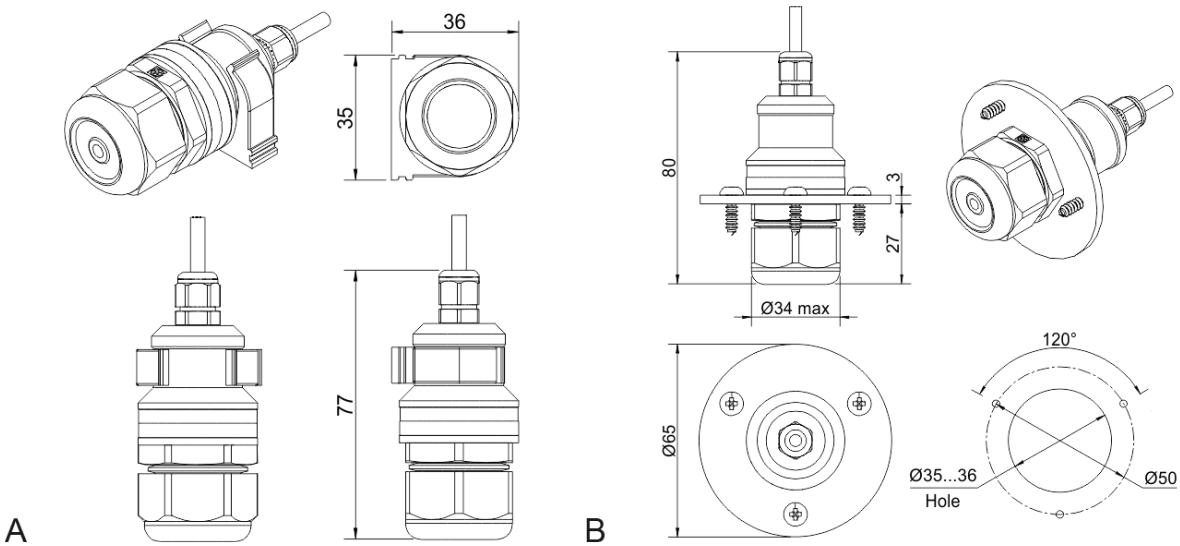

Wall mount remote probe with fixing clamp (default version)

Remote probe with rubber flange and three self-tapping screws (on request)

Authorized Distributor
APL ASIA CO., LTD.
11/129-132 Moo.5 Lamlukka Rd.,T.Kookut, A.Lamlukka, Pathumthani 12130 Thailand.
TEL. 0-2995-4461-4 www.apl-asia.com EMAIL : sales@apl-asia.com LINE@ : @APL-ASIA