IP65 | 4-20 mA 0-10 V | RS485 Modbus

Solvent Vapours Detector-Transmitter E2638-VOC

Features

- Accurate and stable measurement
- Easy to install robust enclosure
- Two analog outputs settable to 4-20 mA or 0-10 V
- RS485 Modbus RTU digital interface
- Relay option
- Attached or remote sensor
- LCD indicator option

Specifications

Detected gases	Toluene, xylene,ethanol etc
Default calibration	Toluene
Sensor type	Metal oxide semiconductor
Sampling method	Diffusion
Typical detection range	Up to 0...1000 ppm (toxic range) 0...100% LEL (flammable range)
Resolution	1 ppm for toxic ranges 0,1 % LEL for flammable range
Response time T90	< 120 s
Sensor lifetime	> 5 years
Maintenance interval	12 months
Signal update	Every 1 second
Self-diagnostics	Full functionality check at start-up
Warm-up time	≤ 1 min
Power supply	12...36 VDC (default) 24 VAC or 230 VAC as options
Power consumption	< 2 VA
Digital interface	RS485, Modbus RTU protocol
Analog outputs	2 × 4-20 mA / 0-10 V, user settable
Output scale width	Recommended: 20-100% of the range; > 10 × resolution in any case
Enclosure	Grey ABS plastic, wall mount, protection class IP65
Dimensions	H90 × W145 × D55 mm (housing only) H140 with cable glands
Operating environment	Industrial indoor and outdoor locations
Operating conditions	-40…+70 °C; <95% RH non-condensing; 0.9...1,1 atm Explosion-safe areas Normal ambient oxygen level Avoid strong mechanical shock, vibrations or EMI; Avoid exposure to corrosive gases or silicone containing products

Dimensions

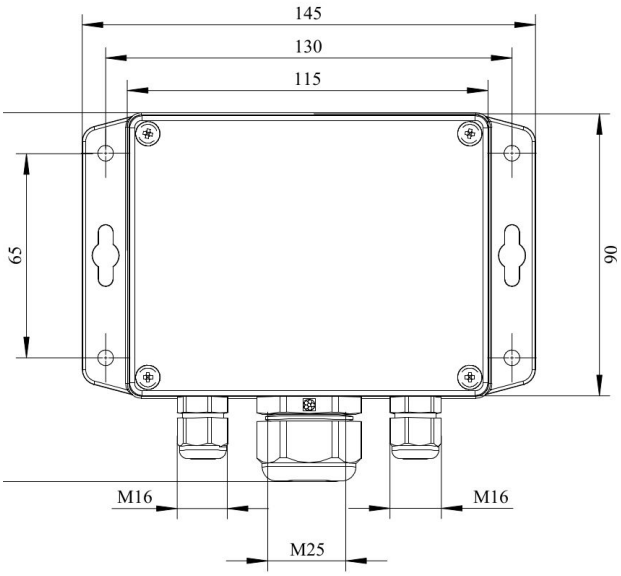

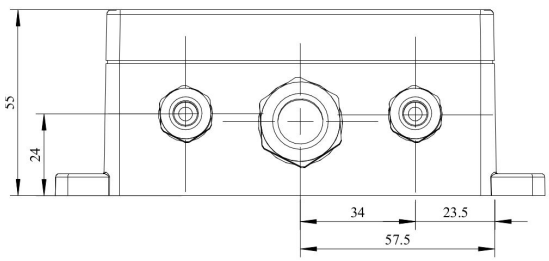

Ask for other versions or custom designed products

Additional options

Remote sensor probe	Protection IP65, shielded cable default cable length 3.0 m
Self-test button	Triggers both relays simultaneously; push-button switch
Relay outputs	
Output relays	2 × SPST relays (closing contact), 250 VAC / 30 VDC, 5 A max
Default alarm set-points	LOW: set 100 , release 80 ppm HIGH: set 300, release 240 ppm (for the range 0...1000 ppm) LOW: set 20 , release 16 %LEL HIGH: set 50, release 40 %LEL (for flammability range)
Alarm signalling	
Visual	Red and green LEDs
Acoustic	Buzzer 85 dB
LCD indicator	
Operating temperature	0...+50 °C
Display dimensions	72 × 36 mm
Number of digits	3.5 7-segment
Character height	14 mm
Other features	Backlight
Protection class	IP50 (both for built-in and remote LCD options)

NOTE! Only second analog output (OUT2) is available for a version with LCD.
NOTE! LCD and LEDs can not be chosen simultaneously.

Version with built-in LCD indicator

Version with remote LCD indicator

Remote probe

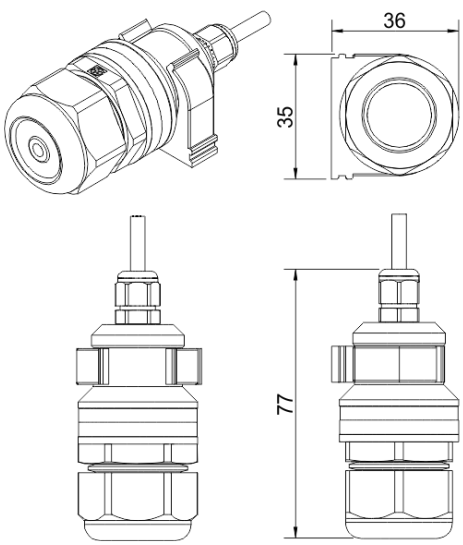

A

Wall mount remote probe with fixing clamp (default version)

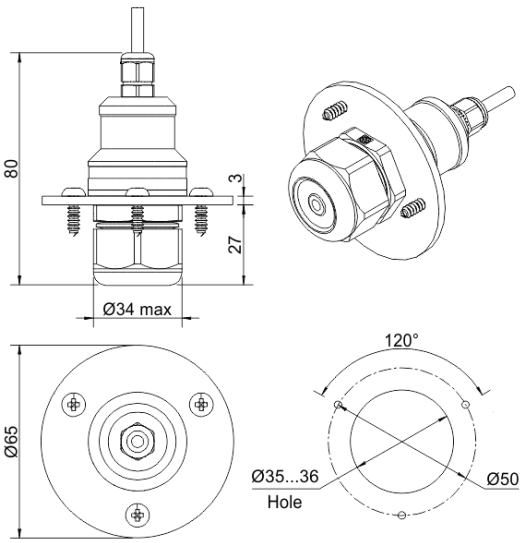

B

Remote probe with rubber flange and three self-tapping screws (on request)

Connection diagrams

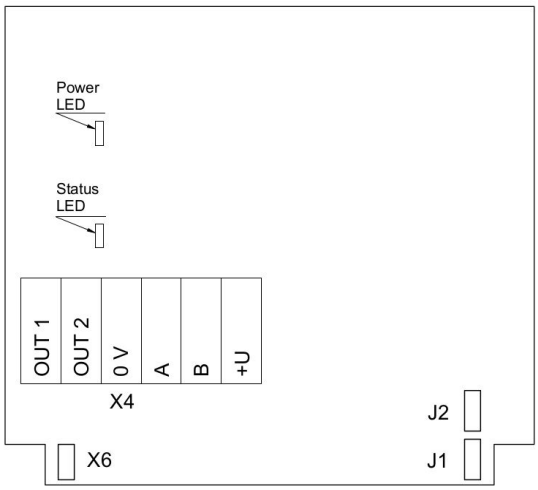

Version without PSU and relays

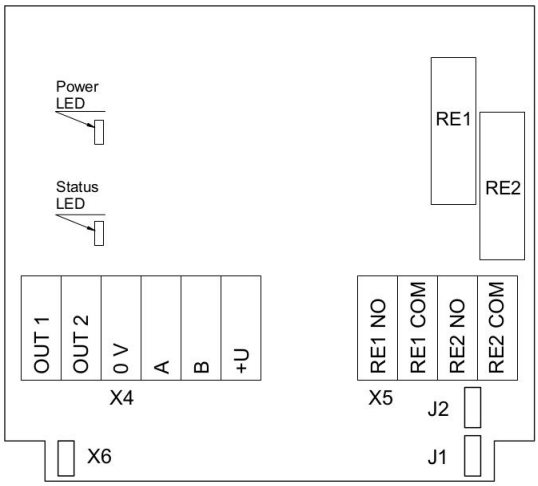

Version without PSU and with relays

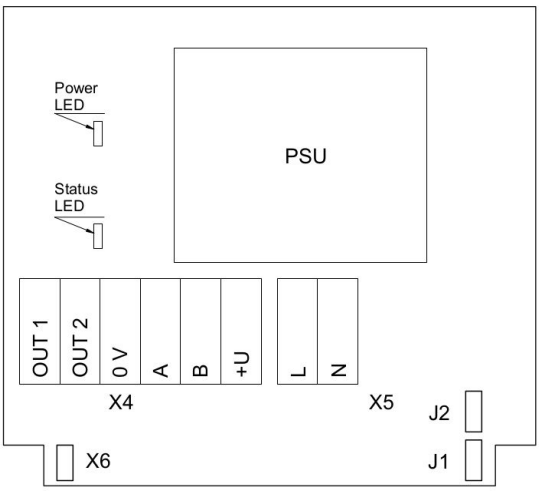

Version with PSU and without relays

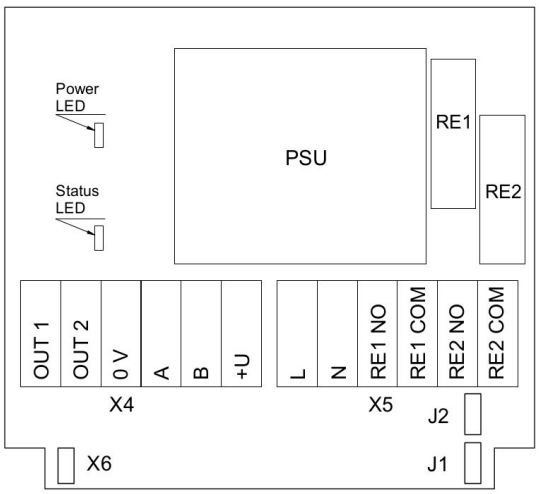

Version with PSU and relays

Jumpers

J1	OUT1 type (open: 4-20 mA; closed 0-10 V)
J2	OUT2 type (open: 4-20 mA; closed 0-10 V)
X6	Reset Modbus network parameters to default
X4 terminals	
OUT1	4-20 mA / 0-10 V output
OUT2	4-20 mA / 0-10 V output
0V	0 V / 24 VAC Neutral (optional)
A	RS485 A / Data +
B	RS485 B / Data -
+U	+24 VDC / 24 VAC Phase (optional)
X5 terminals (optional)	
L	90…265 VAC Phase
N	90…265 VAC Neutral
RE1 NO	Relay 1, normally open terminal
RE1 COM	Relay 1, common terminal
RE2 NO	Relay 2, normally open terminal
RE2 COM	Relay 2, common terminal

Authorized Distributor
APL ASIA CO., LTD.
11/129-132 Moo.5 Lamlukka Rd.,T.Kookut, A.Lamlukka, Pathumthani 12130 Thailand.
TEL. 0-2995-4461-4 www.apl-asia.com EMAIL : sales@apl-asia.com LINE@ : @APL-ASIA