IP65 | 4-20 mA 0-10 V | RS485 Modbus

Carbon Dioxide Detector-Transmitter E2638-CO2

Features

- Accurate and stable measurement
- Easy to install robust enclosure
- Two analog outputs settable to 4-20 mA or 0-10 V
- RS485 Modbus RTU digital interface
- Relay option
- Attached or remote sensor
- LCD indicator option

Specifications

Calibration	Carbon dioxide CO_2
Sensor type	Photoacoustic or Dual beam NDIR
Sampling method	Diffusion
Typical detection range	0...10 000 ppm (ordering code 10K) 0...40 000 ppm (ordering code 40K) 0...5% vol (ordering code 50KN) Up to 100% CO_2 on request
Resolution / digital unit	1 ppm for 10K 10 ppm for 40K 0.2% FS for 50KN
Response time	T60 ≤ 60 s for 10K/40K T50 ≤ 20 s; T90 ≤ 60 s for 50KN
Signal update	Every 5 seconds for 10K/40K Every 1 second for 50KN
Sensor lifetime	~ 10 years for 10K/40K ~ 5 years for 50KN
Maintenance interval	No field recalibration if ABC algorithm is enabled for 10K/40K 12 months for 50KN
Self-diagnostics	Full functionality check at start-up
Warm-up time	≤ 1 min
Power supply	12...36 VDC (default) 24 VAC or 230 VAC as options
Power consumption	< 2 VA
Digital interface	RS485, Modbus RTU protocol
Analog outputs	2 × 4-20 mA / 0-10 V, user settable
Output scale width	Recommended: 5-100% of the range; > 10 × resolution in any case
Enclosure	Grey ABS plastic, wall mount, protection class IP65
Dimensions	H90 × W145 × D50 mm (housing only) H140 with cable glands

Dimensions

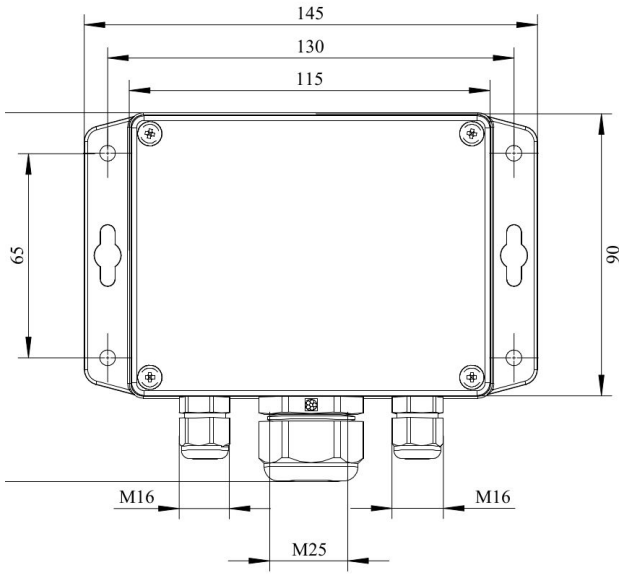

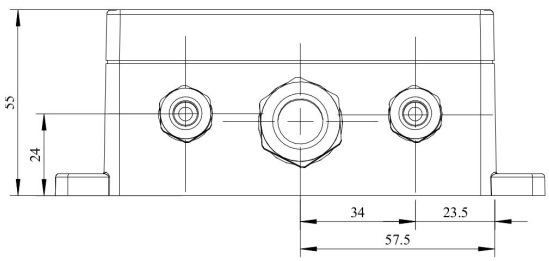

Ask for other versions or custom designed products

Operating environment	Industrial indoor and outdoor locations
Operating conditions	-40...+60 °C, 0...100 %RH; 0,9...1,1 atm; Explosion-safe areas; Non-aggressive atmosphere

Additional options

Remote sensor probe	Protection IP65, shielded cable default cable length 3.0 m
Self-test button	Triggers both relays simultaneously; push-button switch
Relay outputs	
Output relays	2 × SPST relays (closing contact), 250 VAC / 30 VDC, 5 A max
Default alarm set-points	Determined by user within 5-95% of the range
Alarm signalling	
Visual	Red and green LEDs
Acoustic	Buzzer 85 dB
LCD indicator	
Operating temperature	0...+50 °C
Display dimensions	72 × 36 mm
Number of digits	3.5 7-segment
Character height	14 mm
Other features	Backlight
Protection class	IP50 (both for built-in and remote LCD options)

NOTE! Only one analog output is available for a version with LCD.
NOTE! LCD and LEDs can not be chosen simultaneously.

Version with built-in LCD indicator

Version with remote LCD indicator

Connections table

Jumpers	
J1	OUT1 type (open: 4-20 mA; closed 0-10 V)
J2	OUT2 type (open: 4-20 mA; closed 0-10 V)
X6	Reset Modbus network parameters to default
X4 terminals	
OUT1	4-20 mA / 0-10 V output
OUT2	4-20 mA / 0-10 V output
0V	0 V / 24 VAC Neutral (optional)
A	RS485 A / Data +
B	RS485 B / Data -
+U	+24 VDC / 24 VAC Phase (optional)
X5 terminals (optional)	
L	90…265 VAC Phase
N	90…265 VAC Neutral
RE1 NO	Relay 1, normally open terminal
RE1 COM	Relay 1, common terminal
RE2 NO	Relay 2, normally open terminal
RE2 COM	Relay 2, common terminal

Connection diagrams

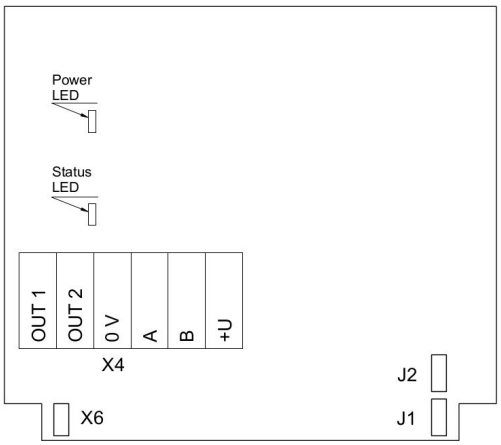

Version without PSU and relays

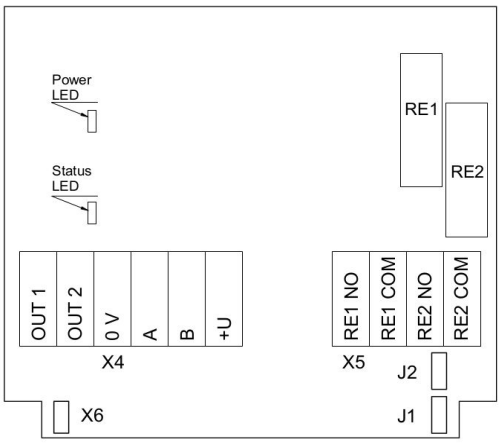

Version without PSU and with relays

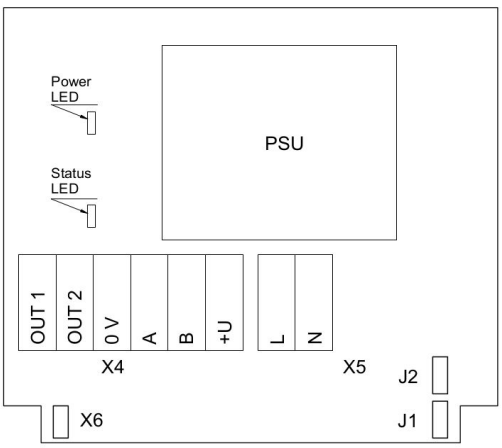

Version with PSU and without relays

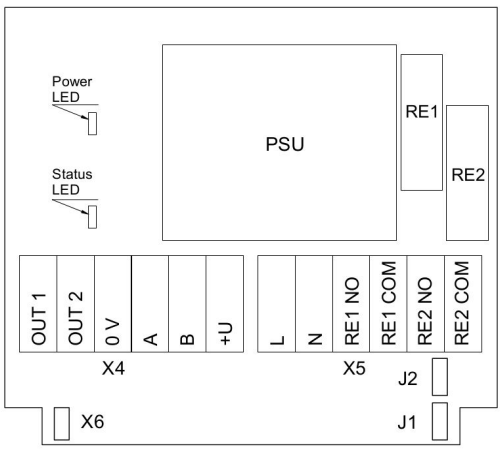

Version with PSU and relays

Remote probe

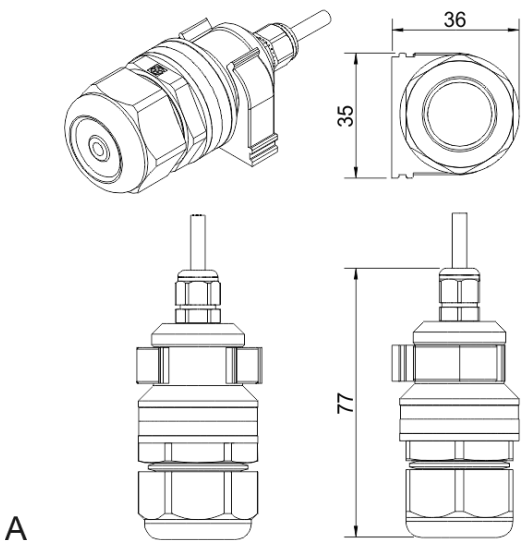

Wall mount remote probe with fixing clamp (default version)

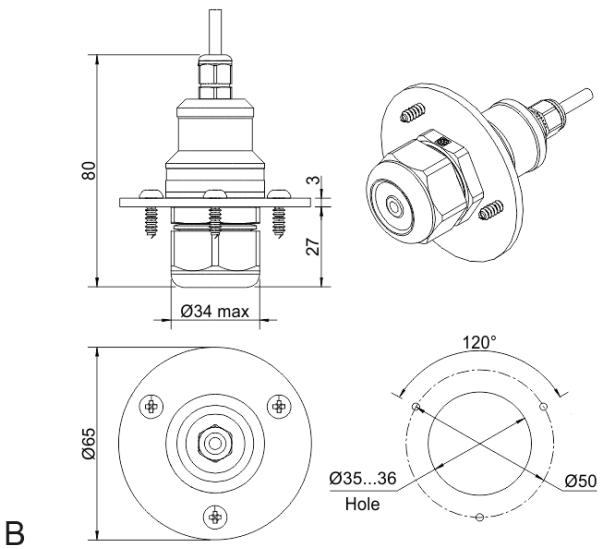

Remote probe with rubber flange and three self-tapping screws (on request)

With 50KN sensor dimensions

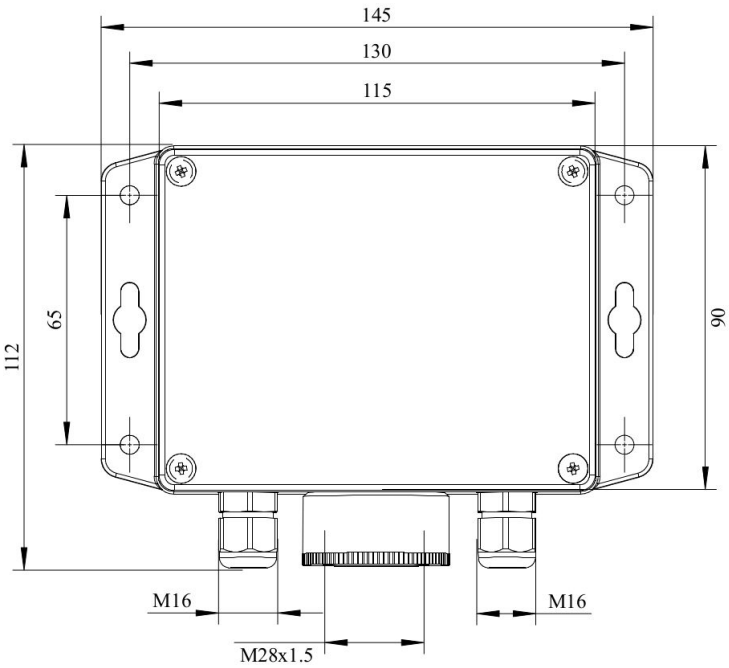

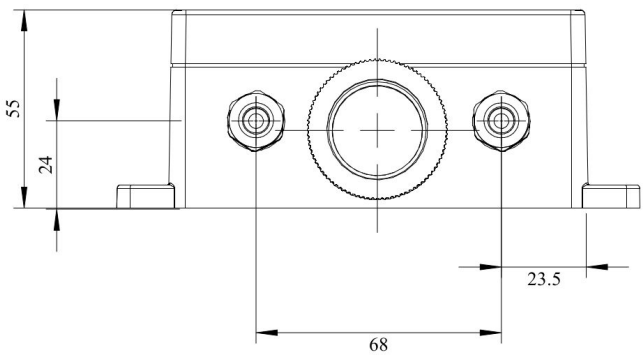

50KN sensor Remote probe

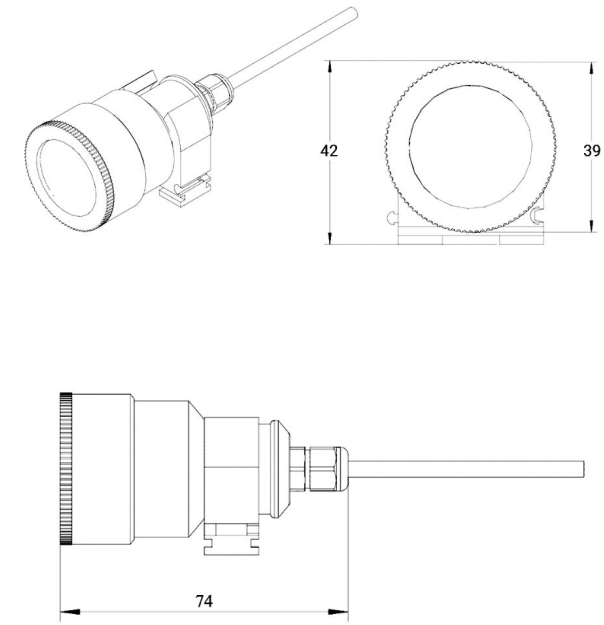

C

Wall mount remote probe with fixing clamp (default version)

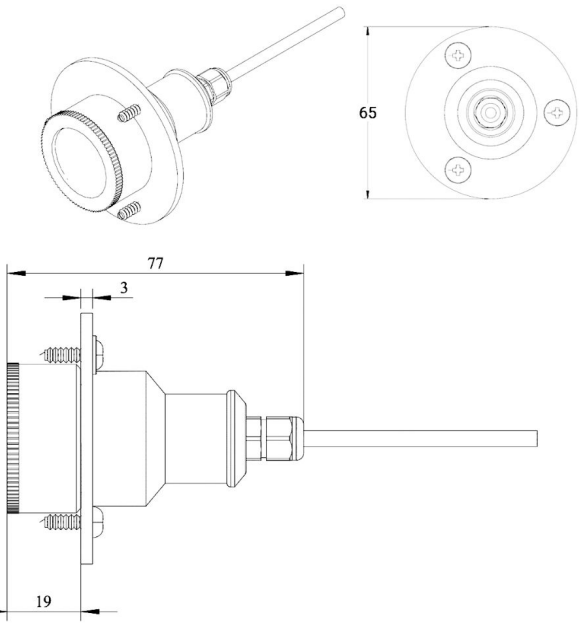

D

Remote probe with rubber flange and three self-tapping screws (on request)

Authorized Distributor
APL ASIA CO., LTD.
11/129-132 Moo.5 Lamlukka Rd.,T.Kookut, A.Lamlukka, Pathumthani 12130 Thailand.
TEL. 0-2995-4461-4 www.apl-asia.com EMAIL : sales@apl-asia.com LINE@ : @APL-ASIA