IP65 | 4-20 mA 0-10 V | RS485 Modbus

Ammonia Detector-Transmitter E2638-NH3-E

Features

- Accurate and stable measurement
- Easy to install robust enclosure
- Two analog outputs settable to 4-20 mA or 0-10 V
- RS485 Modbus RTU digital interface
- Relay option
- Attached or remote sensor
- LCD indicator option

Specifications

Calibration	Ammonia NH_3		
Sensor type	Electrochemical		
Sampling method	Diffusion		
Typical detection range	0...100 ppm	0...300 ppm	0...1000 ppm
Maximum overload	200 ppm	500 ppm	1500 ppm
Resolution	1 ppm	1 ppm	1 ppm
Response time T90	< 75s		
Signal update	Every 1 second		
Sensor lifetime	> 2 years		
Maintenance interval	6 months		
Self-diagnostics	Full functionality check at start-up		
Warm-up time	≤ 1 min		
Power supply	12...36 VDC (default) 24 VAC or 230 VAC as options		
Power consumption	< 2 VA		
Digital interface	RS485, Modbus RTU protocol		
Analog outputs	2 × 4-20 mA / 0-10 V, user settable		
Output scale width	Recommended: 20-100% of the range; > 10 × resolution in any case		
Enclosure	Grey ABS plastic, wall mount, protection class IP65		
Dimensions	H90 × W145 × D50 mm (housing only) H140 with cable glands		
Operating environment	Industrial indoor and outdoor locations		
Operating conditions	-40...+50°C, 15...90 %RH non-condensing; 0,9...1,1 atm; Explosion-safe areas; Non-aggressive atmosphere **NOTE!** The device is not suitable for areas with constantly high ammonia concentration; **NOTE!** We offer technical solutions for extreme humidity, please ask for more information.		

Dimensions

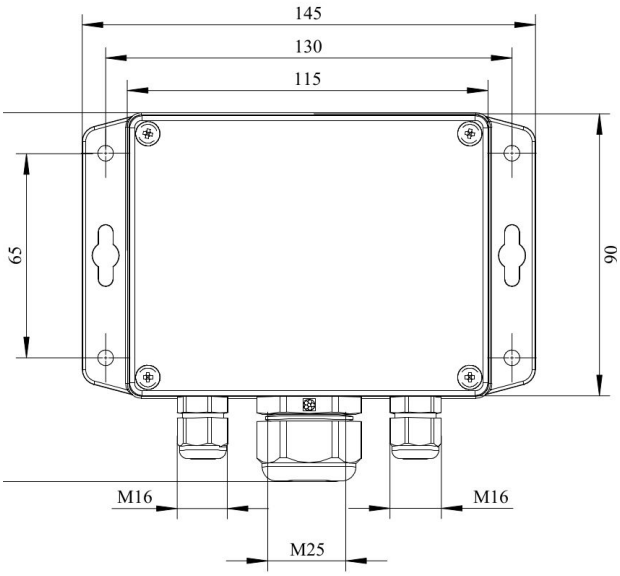

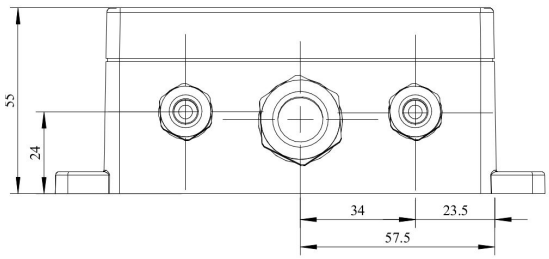

Ask for other versions or custom designed products

Additional options

Remote sensor probe	Protection IP65, shielded cable default cable length 3.0 m
Self-test button	Triggers both relays simultaneously; push-button switch
Relay outputs	
Output relays	2 × SPST relays (closing contact), 250 VAC / 30 VDC, 5 A max
Default alarm set-points	For 0...100 ppm range: RE1 (LOW): set 25; release 20 ppm RE2 (HIGH): set 35; release 28 ppm For other ranges: defined by user within 5-95% of the detection range
Alarm signalling	
Visual	Red and green LEDs
Acoustic	Buzzer 85 dB
LCD indicator	
Operating temperature	0...+50 °C
Display dimensions	72 × 36 mm
Number of digits	3.5 digit 7-segment
Character height	14 mm
Other features	Backlight
Protection class	IP50 (both for built-in and remote LCD options)

NOTE! Only second analog output (OUT2) is available for a version with LCD.
NOTE! LCD and LEDs can not be chosen simultaneously.

Version with built-in LCD indicator

Version with remote LCD indicator

Remote probe

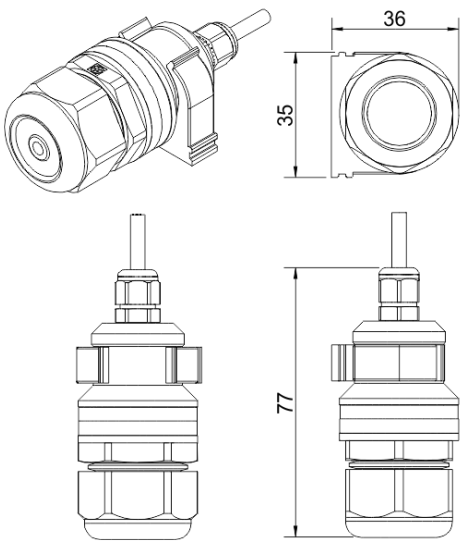

A

Wall mount remote probe with fixing clamp (default version)

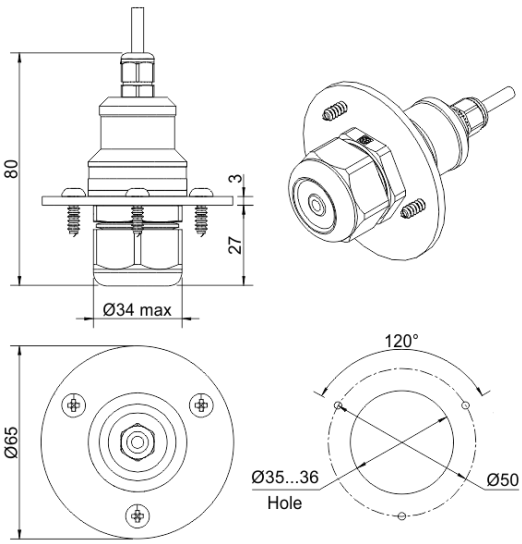

B

Remote probe with rubber flange and three self-tapping screws (on request)

Connection diagrams

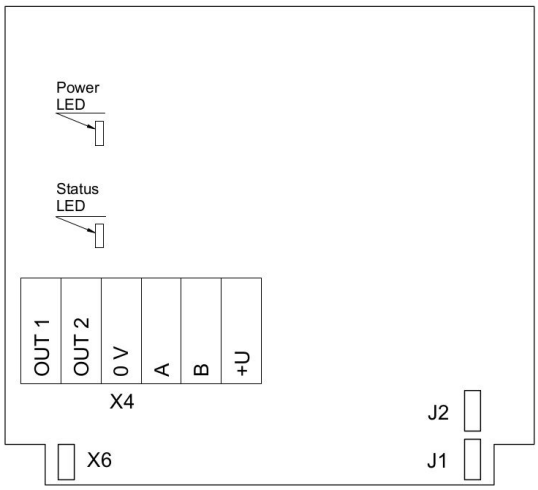

Version without PSU and relays

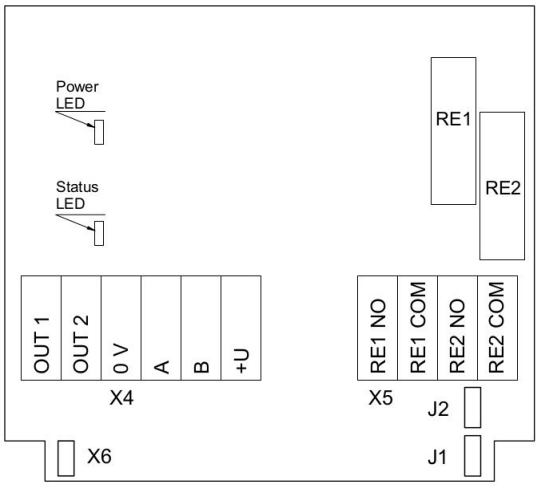

Version without PSU and with relays

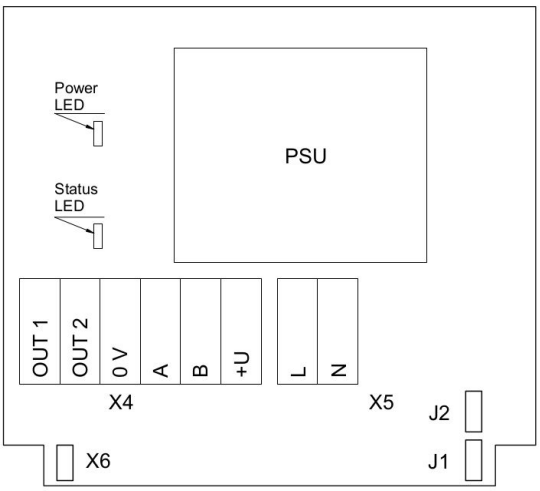

Version with PSU and without relays

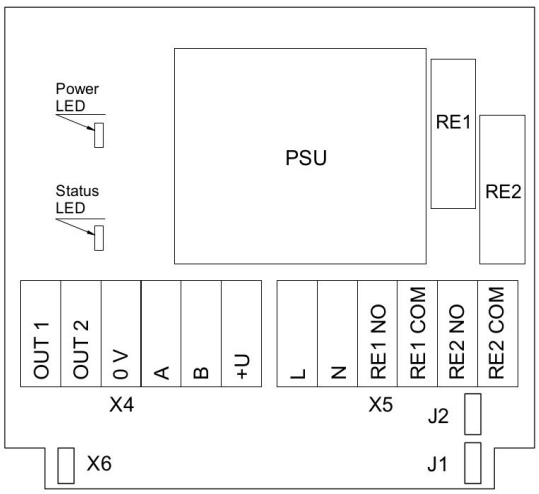

Version with PSU and relays

Jumpers	
J1	OUT1 type (open: 4-20 mA; closed 0-10 V)
J2	OUT2 type (open: 4-20 mA; closed 0-10 V)
X6	Reset Modbus network parameters to default
X4 terminals	
OUT1	4-20 mA / 0-10 V output
OUT2	4-20 mA / 0-10 V output
0V	0 V / 24 VAC Neutral (optional)
A	RS485 A / Data +
B	RS485 B / Data -
+U	+24 VDC / 24 VAC Phase (optional)
X5 terminals (optional)	
L	90…265 VAC Phase
N	90…265 VAC Neutral
RE1 NO	Relay 1, normally open terminal
RE1 COM	Relay 1, common terminal
RE2 NO	Relay 2, normally open terminal
RE2 COM	Relay 2, common terminal

Authorized Distributor
APL ASIA CO., LTD.
11/129-132 Moo.5 Lamlukka Rd.,T.Kookut, A.Lamlukka, Pathumthani 12130 Thailand.
TEL. 0-2995-4461-4 www.apl-asia.com EMAIL : sales@apl-asia.com LINE@ : @APL-ASIA