Refrigerant Detector
E2610-HFC

Features

- Accurate and stable measurement
- Compact housing providing optimal airflow
- Visual and acoustic alarms
- Two output relays for alarm / ventilation control

Specifications

Calibration	Refrigerant gas
Sensor type	Metal oxide semiconductor
Sampling method	Diffusion
Response time T90	<120 s
Signal update	Every 1 second
Sensor lifetime	> 5 years
Maintenance interval	12 months
Self-diagnostics	Full functionality check at start-up
Warm-up time	≤ 1 min
Power supply	24 VDC/AC ±20% (default) or 230 VAC (optional)
Power consumption	< 2 VA
Digital interface	UART
Output relays	2 relays with switch-over contact (SPDT), 250 VAC / 30 VDC, 5 A max
Default alarm set-points	Release - LOW - HIGH 160-200-400 ppm
Alarms	Blinking LED, buzzer 85 dB
Enclosure	ABS plastic with ventilation slots, protection class IP20
Dimensions	H 85 × W 85 × D 37 mm
Operating conditions	-30...60°C, <95% RH without condensation, 0,9...1,1 atm; Non-ATEX-rated areas Avoid strong mechanical shock, vibrations or EMI Avoid exposure to corrosive gases

Dimensions

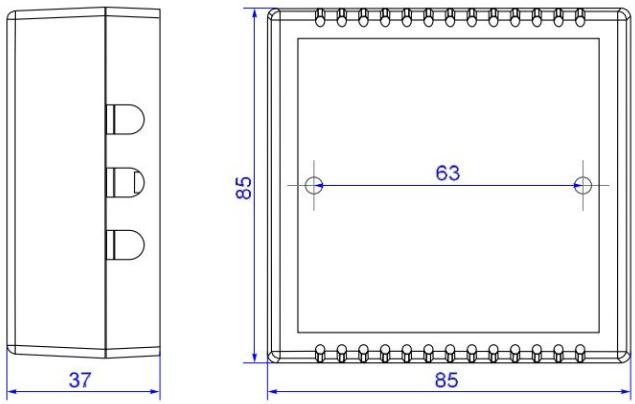

Ask for other versions or custom designed products

Connection diagram

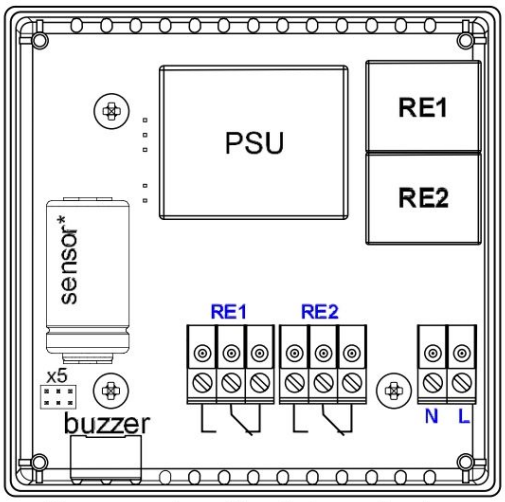

*Sensors may have different shape and/or size

Terminals

RE1 NO	Relay 1, normally open terminal
RE1 COM	Relay 1, common terminal
RE1 NC	Relay 1, normally closed terminal
RE2 NO	Relay 2, normally open terminal
RE2 COM	Relay 2, common terminal
RE2 NC	Relay 2, normally closed terminal
L	90…265 VAC Phase (optional 24 VAC / VDC)
N	90…265 VAC Neutral (optional 24 VAC / VDC)

Authorized Distributor
APL ASIA CO., LTD.
11/129-132 Moo.5 Lamlukka Rd.,T.Kookut, A.Lamlukka, Pathumthani 12130 Thailand.
TEL. 0-2995-4461-4 www.apl-asia.com EMAIL : sales@apl-asia.com LINE@ : @APL-ASIA