Solvent Vapor Detector
E2610-VOC

Features

- Toluene, Xylene, Ethanol etc.
- Compact housing providing optimal airflow
- Visual and acoustic alarms
- Two output relays for alarm / ventilation control

Specifications

Detected vapors	Acetone, Benzene, Ethanol, Ethyl Acetate, Toluene, Xylenes etc
Default calibration	Toluene
Sensor type	Metal oxide semiconductor
Sampling method	Diffusion
Typical detection range	0...100% LEL 0...100 to 1000 ppm
Resolution	0,1 %LEL 1 ppm
Accuracy	± 2 % of the range
Response time	< 120 seconds
Signal update	Every 1 second
Sensor lifetime	> 5 years
Maintenance interval	12 months
Self-diagnostics	Full functionality check at start-up
Warm-up time	≤ 1 min
Power supply	24 VDC/AC ±20% (default) or 230 VAC (optional)
Power consumption	< 2 VA
Digital interface	UART
Output relays	2 relays with switch-over contact (SPDT), 250 VAC / 30 VDC, 5 A max
Default alarm set-points	Release - LOW - HIGH 7 - 10 - 25 %LEL
Alarms	Blinking LED, buzzer 85 dB
Enclosure	ABS plastic with ventilation slots, protection class IP20
Dimensions	H 85 × W 85 × D 37 mm
Operating conditions	-40...+70 °C <95 %RH; Pressure 0,9...1,1 atm; Non-atex rated spaces; Normal ambient oxygen level; Avoid strong mechanical shock, vibrations or EMI; Avoid exposure to corrosive gases or silicone containing products.

Dimensions

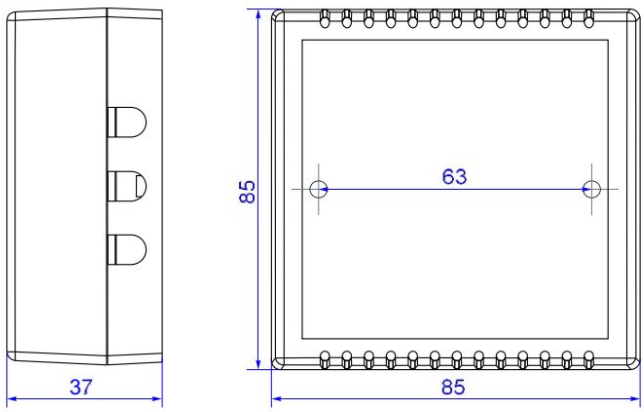

Ask for other versions or custom designed products

Connection diagram

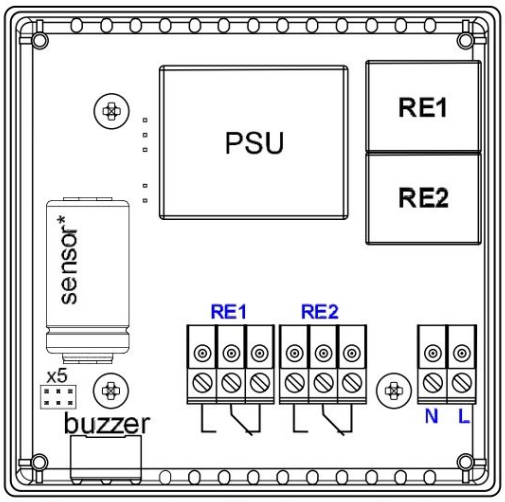

*Sensors may have different shape and/or size

Terminals

RE1 NO	Relay 1, normally open terminal
RE1 COM	Relay 1, common terminal
RE1 NC	Relay 1, normally closed terminal
RE2 NO	Relay 2, normally open terminal
RE2 COM	Relay 2, common terminal
RE2 NC	Relay 2, normally closed terminal
L	90…265 VAC Phase (optional 24 VAC / VDC)
N	90…265 VAC Neutral (optional 24 VAC / VDC)