IP65 | 4-20 mA 0-10 V | RS485 Modbus

Combustible Gases Transmitter E2618-LEL

Features

- Wall-mount or duct-mount version
- Industrial IP65 housing
- Two analog outputs settable to 4-20 mA or 0-10 V
- RS485 Modbus RTU digital interface
- Attached or remote sensor

Specifications

Detected gases	Hydrogen, methane, acetylene, propane, butane, hexane, octane	
Default calibration	Methane CH_4	
Sensor type	Metal-oxide semiconductor Pellistor (catalytic bead) on demand	
Sampling method	Diffusion	
Sensor	MOS	Pellistor
Typical detection range	0...100% LEL	0...100% LEL
Resolution	0.1% LEL	1% LEL
Response time T90	ca. 60 s	≤10 s
Sensor lifetime	> 5 years	> 5 years
Maintenance interval	12 months	6 months
Operating temperature	-40...+70 °C	-40...+70°C
Signal update	Every 1 second	
Self-diagnostics	Full functionality check at start-up	
Warm-up time	≤ 1 min	
Power supply	12...36 VDC (default) 24 VAC as option	
Power consumption	< 2 VA	
Digital interface	RS485, Modbus RTU protocol	
Analog outputs	2 × 4-20 mA / 0-10 V, user settable	
Output scale width	Recommended: 20-100% of the range; > 10 × resolution in any case	
Enclosure	Grey ABS plastic, wall mount, protection class IP65	
Dimensions	H82 × W80 × D55 mm	
Remote sensor probe	Protection IP65, shielded cable default cable length 3.0 m	
Operating environment	Industrial indoor and outdoor locations	
Operating conditions	(operating temperature is specified above) ≤ 95% RH non condensing; 0.9...1,1 atm Explosion-safe areas; Normal ambient O_2 level; Avoid exposure to corrosive gases or silicone containing products.	

Wall mount version

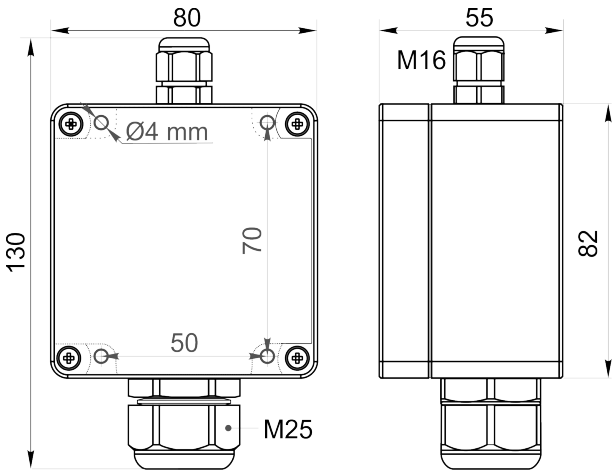

Duct mount version

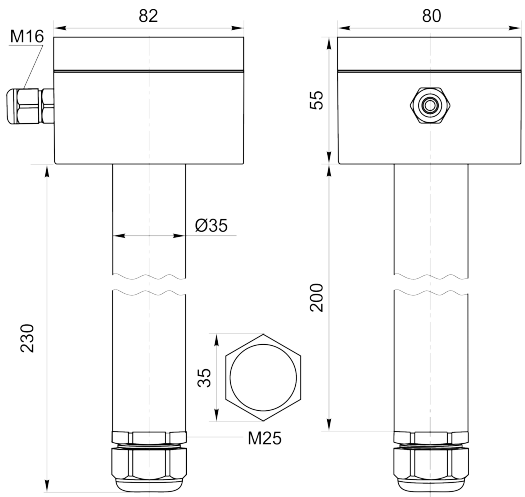

Ask for other versions or custom designed products

Connection diagram

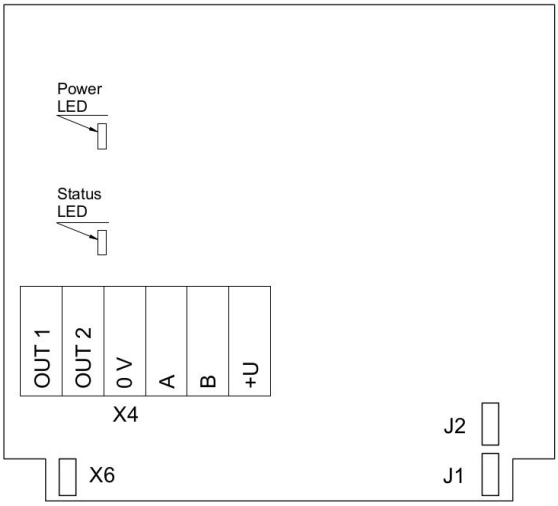

PCB without PSU and relays

Jumpers

J1	OUT1 type (open: 4-20 mA; closed 0-10 V)
J2	OUT2 type (open: 4-20 mA; closed 0-10 V)
X6	Reset Modbus network parameters to default

X4 terminals

OUT1	4-20 mA / 0-10 V output
OUT2	4-20 mA / 0-10 V output
0V	0 V / 24 VAC Neutral (optional)
A	RS485 A / Data +
B	RS485 B / Data -
+U	+24 VDC / 24 VAC Phase (optional)

Remote probe

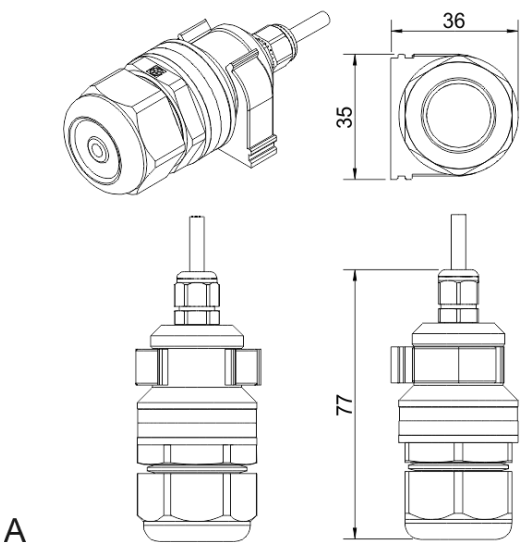

Wall mount remote probe with fixing clamp (default version)

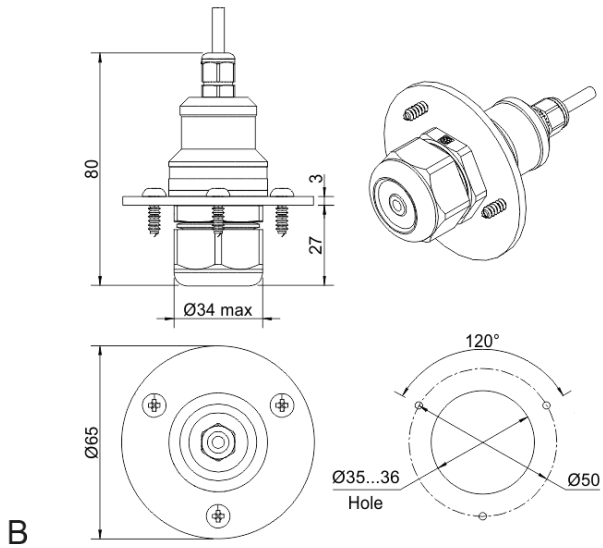

Remote probe with rubber flange and three self-tapping screws (on request)

Authorized Distributor
APL ASIA CO., LTD.
11/129-132 Moo.5 Lamlukka Rd.,T.Kookut, A.Lamlukka, Pathumthani 12130 Thailand.
TEL. 0-2995-4461-4 www.apl-asia.com EMAIL : sales@apl-asia.com LINE@ : @APL-ASIA