# Carbon Monoxide Detector
# E2630-CO

## Features

- Accurate and stable measurement
- Wall-mount IP65 protected housing
- Visual and acoustic alarms
- Two output relays for alarm / ventilation control

## Specifications

| | |
|---|---|
| Calibration | Carbon monoxide CO |
| Sensor type | Electrochemical |
| Sampling method | Diffusion |
| Typical detection range | Standard 0...200 ppm<br>high 0...1000 ppm CO |
| Accuracy | ± (3% of range + 5 ppm CO) |
| Response time | ca. 30 s |
| Signal update | Every 1 second |
| Sensor lifetime | > 10 years |
| Maintenance interval | 12 months |
| Self-diagnostics | Full functionality check at start-up,<br>testing by magnetic switch |
| Warm-up time | ≤ 1 min |
| Power supply | 24 VDC/AC ±20% (default)<br>or 230 VAC (optional) |
| Power consumption | < 2 VA |
| Digital interface | UART |
| Output relays | 2 relays with switch-over contact (SPDT),<br>250 VAC / 30 VDC, 5 A max |
| Default alarm set-points<br>for 0...200 ppm range<br>for 0...1000 ppm range | Release - LOW - HIGH<br>18 - 25 - 125 ppm<br>88 - 125 - 250 ppm |
| Alarms | Blinking LED, buzzer 85 dB |
| Enclosure | Grey ABS plastic, wall mount,<br>protection class IP65 |
| Dimensions | H140 × W145 × D55 mm |
| Operating conditions | -20…+50 °C<br>0...90% RH non-condensing;<br>0,9...1,1 atm;<br>Explosion-safe areas<br>Non-aggressive atmosphere |

## Dimensions

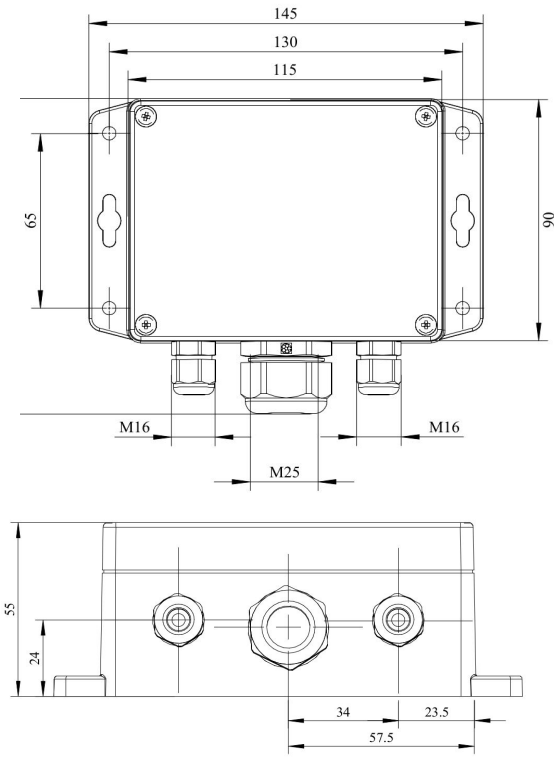


## Magnet key

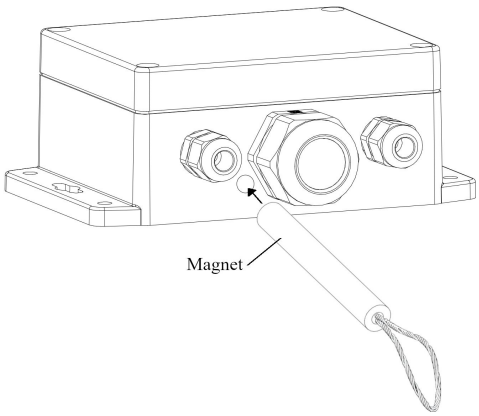


**Ask for other versions or custom designed products**

## Connection diagram

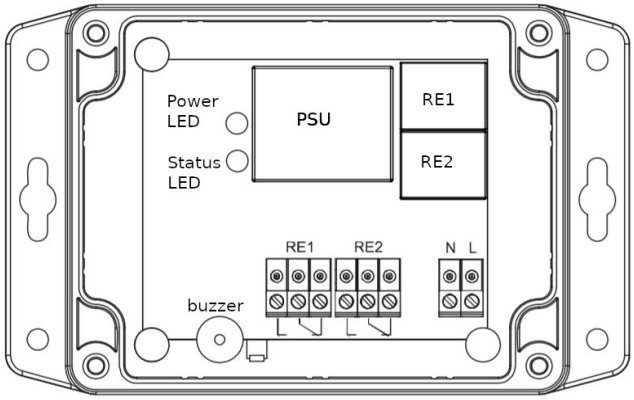


**Terminals**

| | |
|---|---|
| **RE1 NO** | Relay 1, normally open terminal |
| **RE1 COM** | Relay 1, common terminal |
| **RE1 NC** | Relay 1, normally closed terminal |
| **RE2 NO** | Relay 2, normally open terminal |
| **RE2 COM** | Relay 2, common terminal |
| **RE2 NC** | Relay 2, normally closed terminal |
| **L** | 90…265 VAC Phase (optional 24 VAC / VDC) |
| **N** | 90…265 VAC Neutral (optional 24 VAC / VDC) |

**Authorized Distributor**
APL ASIA CO., LTD.
11/129-132 Moo.5 Lamlukka Rd.,T.Kookut, A.Lamlukka, Pathumthani 12130 Thailand.
TEL. 0-2995-4461-4 www.apl-asia.com EMAIL : sales@apl-asia.com LINE@ : @APL-ASIA